GAS PRESSURE REGULATORS CATALOG

4th Edition

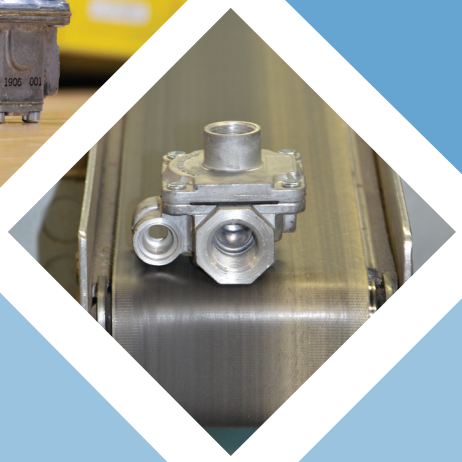

MAXITROL®

⚠ WARNING

Service and installation must be performed by a trained/experienced service technician.

All products used with combustible gas **must** be installed and used **strictly** in accordance with the instructions of the Original Equipment Manufacturer (OEM) and with all applicable government codes and regulations, e.g. plumbing, mechanical, and electrical codes and practices. Maxitrol products should be installed and operated in accordance with Maxitrol Safety Warning Instructions.

Maxitrol Company is NOT responsible for any errors or omissions in reliance by anyone of any information set forth in this catalog without additional reference to local requirements and applicable ordinances or codes.

Other worldwide approvals and certifications available upon inquiry.

© 2020, Maxitrol Company. All Rights Reserved.

RV SERIES

Straight-Thru-Flow Design

Maxitrol's original straight-thru-flow (STF) design regulators are non-lockup type regulators for high capacities at low inlet pressures. The difference between STF design and other type regulators is the conical valve. The cone principal permits gas to flow straight through the regulator without changing direction. Frictional flow resistance is reduced, resulting in greater capacity. An improved flow pattern provides accurate, sensitive regulation at extremely low pressure differentials. Typical applications include residential, commercial, and industrial gas-fired appliances and equipment used on low or medium pressure gas supplies.

RV81

Specifications

Pipe Sizes ..... 1/2" to 3" threaded connections with NPT or ISO7-1 threads. 4" 150lb. flange (RV131 only).

Housing Material ..... RV52, RV53, RV61, RV81, RV91, RV111: aluminum; RV131: cast iron.

Mounting ..... RV52, RV53, RV61 are suitable for multi-positional mounting. RV81, RV91, RV111, RV131, mount in an upright position only. If a vLimiter® or vProtector® is installed, mount in an upright position only. The vLimiter® 12A06 is multi-positional.

NOTE: All Maxitrol gas pressure regulators should be installed and operated in accordance with Maxitrol Safety Warning Instructions (see GPR_MI_EN.ES or GPR_CSA_MI_EN.FR).

Certifications ..... RV52, RV53, RV61, RV81, RV91, RV111: ANSI Z21.18/CSA6.3 Gas Appliance Pressure Regulators.

Gas Types ..... Suitable for natural, manufactured, mixed gases, liquefied petroleum gases, and LP gas-air mixtures.

Rated Inlet Pressure ..... CSA Certified: RV52, RV53, RV61, RV81, RV91, RV111: 1/2 psi (3.4 kPa)
Maxitrol Tested* ..... RV52, RV53: 1/2 psi (3.4 kPa)
RV61, RV81, RV91, RV111: 1 psi (6.9 kPa)
RV131: 2 psi (13.8 kPa)
*Do not use if inlet pressure is more than 10 times desired outlet pressure.

Emergency Exposure Limits ..... RV52, RV53: 3 psi (21 kPa)
RV61, RV81, RV91, RV111: 5 psi (34 kPa)
RV131: 15 psi (103 kPa)

Gas Containment Limits ..... RV52, RV53: 15 psi (103 kPa)
RV61, RV81, RV91, RV111, RV131: 25 psi (172 kPa)

NOTE: Internal damage may occur when exposed to these pressures.

Ambient Temperature Ranges ... RV52, RV53, RV61, RV81, RV91, RV111: -40° to 205°F (-40° to 96°C)
RV131: -40° to 125°F (-40° to 52°C)

Minimum Regulation ..... RV52, RV53: 20 CFH; RV61: 25 CFH; RV81, RV91: 50 CFH; RV111, RV131: 250 CFH. Expressed in CFH @ 0.64 sp gr gas.

Model Designations ..... (F) Factory-set; fixed non-adjustable regulator.
(M) B.S.P. - PL parallel thread - conforms to ISO 701, where pressure tight joints are made on the threads.

© 2020, Maxitrol Company. All Rights Reserved.

Capacities and Pressure Drop

Capacities expressed in CFH (m^3/h) @ 0.64 sp gr gas

Model	Pipe Size	CSA MAX	Pressure Drop - inches w.c. (kPa)												
			0.1 (0.02)	0.2 (0.04)	0.3 (0.07)	0.4 (0.10)	0.5 (0.12)	0.6 (0.15)	0.7 (0.17)	0.8 (0.20)	0.9 (0.22)	1.0 (0.25)	2.0 (0.5)	3.0 (0.75)	4.0 (1.0)
RV52	1/2″ x 1/2″ 3/4″ x 3/4″	450 (12.7)	151 (4.2)	214 (6.1)	262 (7.4)	302 (8.5)	338 (9.5)	370 (10.5)	400 (11.3)	427 (12.1)	453 (12.8)	478 (13.5)	676 (19.1)	828 (23.4)	956 (27.1)
RV53	3/4″ x 3/4″ 1″ x 1″	690 (19.5)	217 (6.1)	306 (8.6)	375 (10.6)	433 (12.2)	484 (13.7)	530 (15)	573 (16.2)	612 (17.3)	650 (18.4)	684 (19.3)	968 (27.4)	1185 (33.5)	1369 (38.7)
RV61	1″ x 1″ 1 1/4″ x 1 1/4″	900 (24.5)	379 (10.7)	536 (15.1)	675 (19.1)	759 (21.5)	848 (24.0)	929 (26.3)	1004 (28.4)	1073 (30.4)	1138 (32.2)	1200 (34.0)	1742 (49.3)	2134 (60.4)	2464 (69.8)
RV81	1 1/4″ x 1 1/4″ 1 1/2″ x 1 1/2″	2500 (70.8)	780 (22.1)	1102 (31.2)	1350 (38.2)	1559 (44.1)	1743 (49.5)	1909 (54.0)	2062 (58.4)	2204 (62.4)	2339 (66.2)	2465 (69.8)	3485 (98.7)	4269 (120)	4929 (139)
RV91	2″ x 2″ 2 1/2″ x 2 1/2″	3275 (92.7)	1212 (34.3)	1714 (48.5)	2100 (59.4)	2424 (68.6)	2711 (76.7)	2969 (84.1)	3208 (90.8)	3429 (97.1)	3637 (103)	3834 (108)	5422 (153)	6640 (188)	7668 (217)
RV111	2 1/2″ x 2 1/2″ 3″ x 3″	7500 (212)	2742 (78.0)	3878 (110)	4750 (134)	5485 (155)	6132 (175)	6718 (190)	7256 (205)	7757 (219)	8227 (233)	8572 (243)	12134 (343)	14862 (420)	17161 (486)
RV131	4″ x 4″	---	4734 (134)	6695 (190)	8200 (232)	9468 (268)	10586 (300)	11596 (328)	12525 (354)	13390 (380)	14202 (402)	14971 (424)	21172 (600)	25930 (734)	29942 (848)

NOTE: See pages 58-59 for Regulator Sizing Requirements and Examples.

Spring Selection Chart: inches w.c. (kPa)

Model	CSA Certified Springs			Other Springs Available							
RV52	3 to 6 (0.75 to 1.5) Plated	4 to 8 (1 to 2) Orange	5 to 12 (1.25 to 3) Blue	1 to 3.5 (0.25 to 0.9) Brown	2 to 5 (0.5 to 1.25) Plated	3 to 8 (0.75 to 2) Pink	4 to 12 (1 to 3) Violet	---	---	---	---
RV53	3 to 6 (0.75 to 1.5) Plated	4 to 8 (1 to 2) Orange	5 to 12 (1.25 to 3) Blue	1 to 3.5 (0.25 to 0.9) Brown	2 to 5 (0.5 to 1.25) Plated	3 to 8 (0.75 to 2) Pink	4 to 12 (1 to 3) Violet	---	---	---	---
RV61	3 to 6 (0.75 to 1.5) Plated	4 to 8 (1 to 2) Orange	5 to 12 (1.25 to 3) Blue	1 to 3.5 (0.25 to 0.9) Brown	2 to 5* (0.5 to 1.25) Plated	3 to 8 (0.75 to 2) Pink	---	---	10 to 22 (2.5 to 5.5) Red	---	---
RV81	3 to 6 (0.75 to 1.5) Plated	4 to 8 (1 to 2) Orange	5 to 12 (1.25 to 3) Blue	1 to 3.5 (0.25 to 0.9) Brown	2 to 5 (0.5 to 1.25) Plated	3 to 8 (0.75 to 2) Pink	4 to 12 (1 to 3) Violet	5 to 15 (1.25 to 3.7) Green	10 to 22 (2.5 to 5.5) Red	---	---
RV91	3 to 6 (0.75 to 1.5) Plated	4 to 8 (1 to 2) Orange	5 to 12 (1.25 to 3) Blue	1 to 3.5 (0.25 to 0.9) Brown	2 to 5 (0.5 to 1.25) Plated)	3 to 8 (0.75 to 2) Pink	4 to 12 (1 to 3) Violet	5 to 15 (1.25 to 3.7) Green	10 to 22 (2.5 to 5.5) Red	---	---
RV111	3 to 6 (0.75 to 1.5) Plated	4 to 8 (1 to 2) Orange	5 to 12 (1.25 to 3) Blue	1 to 3.5 (0.25 to 0.9) Brown	2 to 5 (0.5 to 1.25) Plated	3 to 8 (0.75 to 2) Pink	4 to 12 (1 to 3) Violet	5 to 15 (1.25 to 3.7) Green	10 to 22 (2.5 to 5.5) Red	---	---
RV131	3 to 6 (0.75 to 1.5) Plated	---	5 to 12 (1.25 to 3) Blue	---	2 to 5 (0.5 to 1.25) Plated	3 to 8 (0.75 to 2) Pink	4 to 12 (1 to 3) Violet	---	10 to 22 (2.5 to 5.5) Red	15 to 30 (3.7 to 7.5) Yellow	20 to 42 (5 to 10.5) Black

NOTE: The area within the heavy line indicates CSA certified springs. See pages 56-57 for complete Spring Selection Chart.

* The 2 to 5 inches w.c. (0.5 to 1.25 kPa) spring is also CSA certified for the RV61

© 2020, Maxitrol Company. All Rights Reserved.

RV SERIES
Straight-Thru-Flow Design

Dimensions

Model	Pipe Size	Vent Connection	Swing Radius	Dimensions			
				A	B	C	D
RV52	1/2″, 3/4″	1/8″ NPT	3.6″ (91 mm)	4.9″ (124 mm)	3.2″ (81 mm)	3.3″ (83 mm)	1.3″ (32 mm)
RV53	3/4″, 1″	1/8″ NPT	3.9″ (99 mm)	5.2″ (132 mm)	3.8″ (95 mm)	3.9″ (99 mm)	1.3″ (33 mm)
RV61	1″, 1 1/4″	1/8″ NPT	4.8″ (122 mm)	6.4″ (164 mm)	4.4″ (111 mm)	5.4″ (138 mm)	1.6″ (41 mm)
RV81	1 1/4″, 1 1/2″	3/8″ NPT	6.4″ (162 mm)	8.4″ (213 mm)	6″ (153 mm)	7″ (178 mm)	2″ (51 mm)
RV91	2″	1/2″ NPT	8.5″ (216 mm)	10.8″ (275 mm)	6.5″ (165 mm)	9.1″ (232 mm)	2.3″ (60 mm)
	2 1/2″	1/4″ NPT	8.3″ (212 mm)	10.5″ (267 mm)	7.1″ (181 mm)	9.1″ (232 mm)	2.4″ (62 mm)
RV111	2 1/2″, 3″	3/4″ NPT	11.5″ (284 mm)	15.1″ (373 mm)	9″ (229 mm)	13.4″ (324 mm)	3.5″ (89 mm)
RV131	4″	3/4″ NPT	18.2″ (462 mm)	23.3″ (592 mm)	13.9″ (353 mm)	18″ (457 mm)	5.1″ (130 mm)

NOTE: Dimensions are maximums and to be used only as an aid in designing clearance for the valve. Actual production dimensions may vary somewhat from those shown.

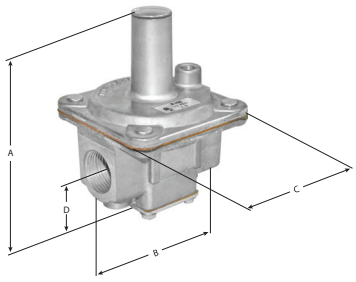

RV52, RV53

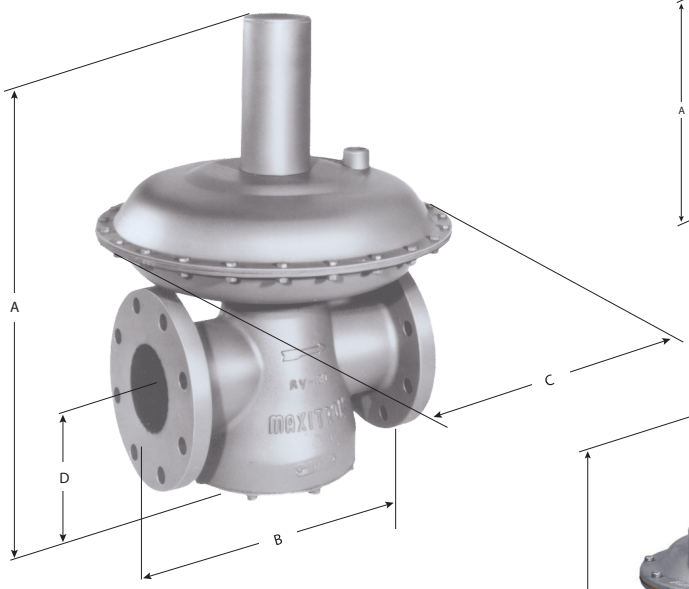

RV131

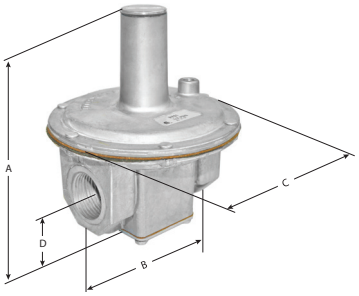

RV61

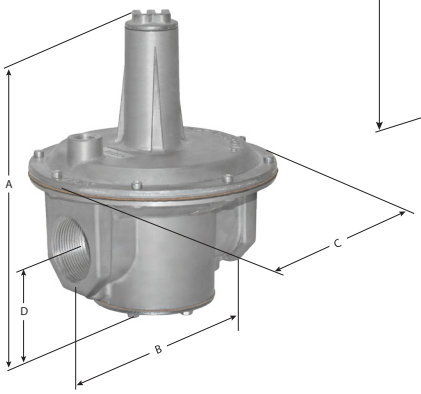

RV81, RV91

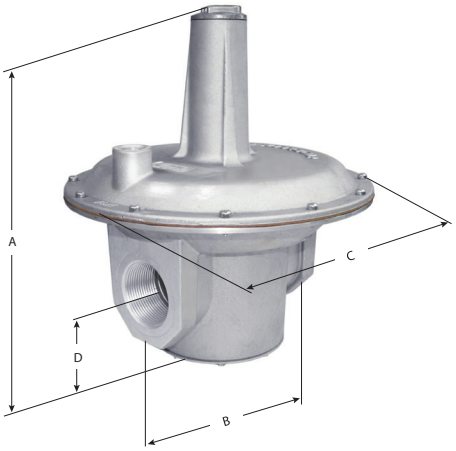

RV111

© 2020, Maxitrol Company. All Rights Reserved.

Straight-Thru-Flow Design

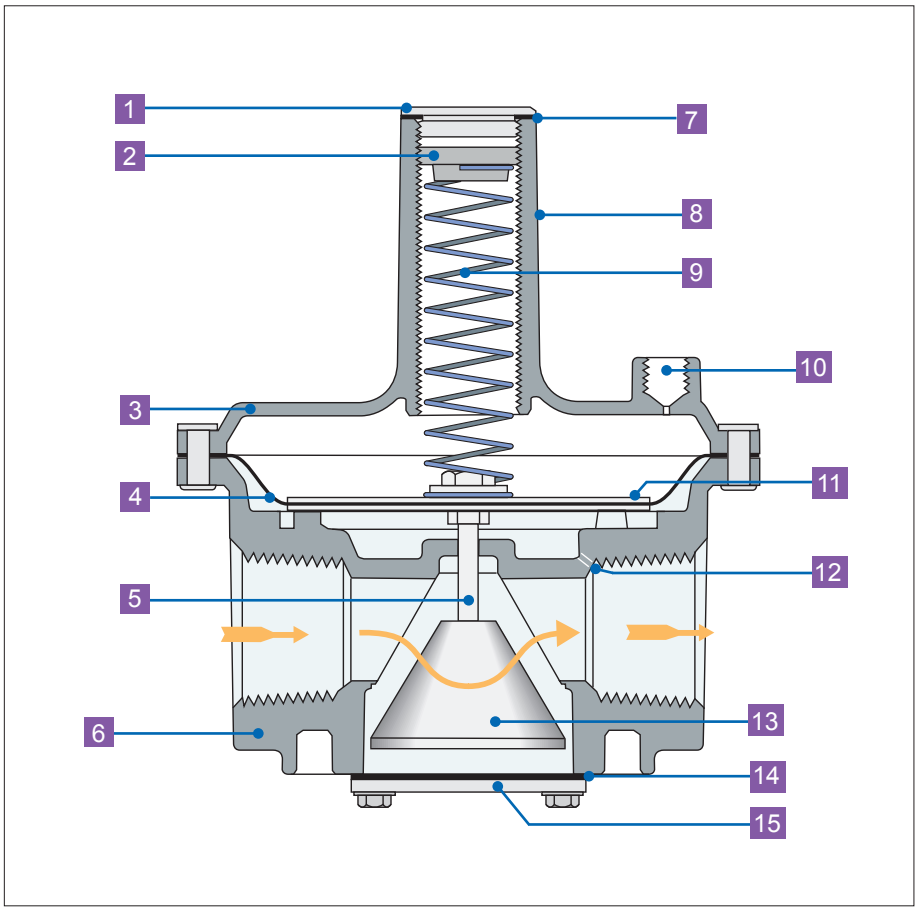

1	Welch Plug or Seal Cap
2	Vibration Resistant Adjusting Screw
3	Top Housing
4	Diaphragm
5	Stem
6	Bottom Housing
7	Seal Cap Gasket
8	Stack
9	Spring
10	Vent Connection
11	Diaphragm Plates
12	Sensing Hole
13	Valve
14	Bottom Plate Gasket
15	Bottom Plate

NOTE: Diagrams are graphical representations only and may differ from actual product.

© 2020, Maxitrol Company. All Rights Reserved.

SIZING A REGULATOR

See **www.maxitrol.com** for our Regulator Sizing Program. Please contact Maxitrol directly for more information on sizing a regulator.

System Requirements

When sizing a regulator the following must be known:

- Gas Type
- Available Inlet Pressure
- Desired Outlet Pressure
- Zero Governor Application (indicated by model number ending in "Z")
- Will the regulator control main burner and pilot load OR main burner only?
- Required minimum and maximum flow rate in cfh or m^3/h or Btu/h
- Pipe Size

In most cases, the manifold pipe size has already been selected on the basis of good engineering practice, and the regulator pipe size should conform to this size.

The capacity of any regulator is not an absolute value but will vary with the application depending on the prevailing differential pressure.

⚠ WARNING

Service and installation must be performed by a trained/experienced service technician.

All products used with combustible gas must be installed and used strictly in accordance with the instructions of the Original Equipment Manufacturer (OEM) and with all applicable government codes and regulations, e.g. plumbing, mechanical, and electrical codes and practices. These instructions do NOT supersede OEM's installation or operating instructions.

All Maxitrol products should be installed and operated in accordance with Maxitrol Safety Warning Instructions.

HOW TO CALCULATE PRESSURE DROP AT VARIOUS FLOW RATES FROM CAPACITY CHART

LP Applications - When using natural gas pressure drop chart to determine LP pressure drop in terms of Btu/h, multiply NAT Btu/h by 1.61; in terms of CFH multiply NAT CFH by 0.645.

Formula: $P2 = P1 \times (Q2/Q1)^2$

P2 = Pressure drop at desired flow rate
P1 = Known pressure drop
Q2 = Desired flow rate
Q1 = Known flow rate

A. Check Capacity Chart, insuring regulator has ample range of regulation and individual load capacities (for use with pilot) for the application.

B. Know the minimum encountered inlet pressure. MINIMUM INLET PRESSURE MINUS "P2" MUST BE GREATER THAN DESIRED OUTLET PRESSURE. Solve for "P2" using the formula above.
(See examples on page 59.)

© 2020, Maxitrol Company. All Rights Reserved.

Sizing Examples

RUBBER SEAT POPPETS

For main burner and pilot load applications.

Example: To select an RV type regulator:

- Known: Single 150,000 Btu/h main burner; pipe size 1/2″; inlet pressure 7″ w.c.; outlet pressure 4″ w.c.
- Solution: The RV48 (1/2″) has a maximum capacity of 230,000 Bth/h and a maximum individual load of 160,000 Btu/h. The pressure drop at a flow rate of 150,000 Btu/h is 0.4″ w.c., well below the available differential of 3″ w.c. The RV48 (without "L" fixed orifice) is the correct regulator to use for the application.

STRAIGHT-THRU-FLOW (S-T-F)

For main burner only applications not requiring a lockup type regulator. When sizing the S-T-F series, it is recommended that pressure drop not exceed 1/2 of available differential pressure.

Example: To select an RV type regulator:

- Known: Flow rate 2,000,000 Btu/h; pipe size 1 1/4″; inlet pressure 9″ w.c.; outlet pressure 5″ w.c.
- Solution: The RV81(1 1/4″) has a maximum capacity of 2,500,000 Btu/h. The pressure drop at a flow of 2,000,000 Btu/h is 0.66″ w.c. The RV81 (1 1/4″) is the correct regulator to use with this application. The pressure drop of the RV61 (1 1/4″) at a flow rate of 2,000,000 Btu/h is 2.64″ w.c. This is within the available differential but exceeds the recommended 50% maximum.

LEVER ACTING

For main burner and pilot load application requiring positive dead-end lockup (see Definitions page 63).

Example: To select a 325 series regulator:

- Known: Single 145,000 Btu/h burner; pipe size 1/2″; inlet pressure 2 psi; outlet pressure 7″ w.c.
- Solution: The 325-3's pressure drop at a flow rate of 145,000 Btu/h is 7″ w.c., well below the available differential of 1 3/4 psi. However, the Maximum Individual Load for th 325-3 is only 100,000 Btu/h. The 325-5 (1/2″) is the correct regulator to use with this application.

BALANCED VALVE

For main burner and pilot load application requiring a lockup type regulator or zero governor usage (see Definitions page 63).

Example: To select a 210 or R/RS series regulator:

- Known: Desired flow rate 6,000,000 Btu/h; pipe size 1 1/2″; inlet pressure 1 psi; outlet pressure 9″ w.c.
- Solution: The 210E (1 1/2″) has a maximum capacity of 10,000,000 Btu/h. The 210D (1 1/2″) has a capacity of 6,000,000 Btu/h. Therefore, the 210E (1 1/2″) will give you the desired outlet pressure of 9″ w.c. and is the correct regulator to use for the application.

© 2020, Maxitrol Company. All Rights Reserved.

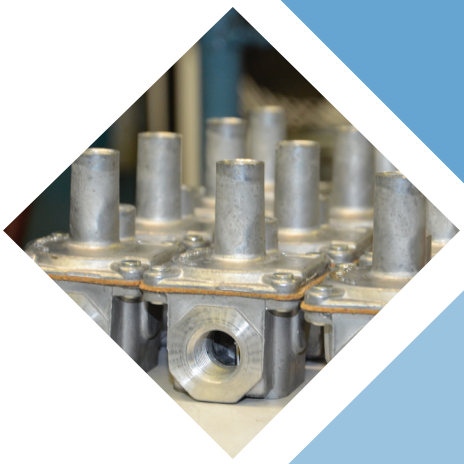

MAXITROL®

Exclusive Distributor North America
for Mertik Maxitrol

Maxitrol Company, Inc.
23555 Telegraph Rd., PO Box 2230
Southfield, MI 48037-2230
USA
Tel: +1 248-356-1400
Fax: +1 248-356-0829
www.maxitrol.com

GPR_MS_EN_04.2020

© 2020, Maxitrol Company. All Rights Reserved.