SCC Inc.

Technical Instructions June 27, 2018

LMV51... Software Version V05.20
LMV52.2... Software Version V05.20
LMV52.4... Software Version V10.30

# LMV5... Linkageless Burner Management System

Combustion Controls

Intentionally Left Blank

| | |
|---|---|
| **Section 1** | **Overview** |
| Section 2 | Wiring |
| Section 3 | Parameters |
| Section 4 | Commissioning |
| Section 5 | VSD |
| Section 6 | $O_2$ Trim |
| Section 7 | Troubleshooting |
| Section 8 | Modbus |
| Section 9 | ACS450 |
| Section 10 | Revision History |
| Appendix A | Application Guide |
| Appendix B* | Complimentary Products Guide |


*Can be found at www.scccombustion.com.

| | |
|---|---|
| **Section 1** | **Overview** |
| Section 2 | Wiring |
| Section 3 | Parameters |
| Section 4 | Commissioning |
| Section 5 | VSD |
| Section 6 | $O_2$ Trim |
| Section 7 | Troubleshooting |
| Section 8 | Modbus |
| Section 9 | ACS450 |
| Section 10 | Revision History |
| Appendix A | Application Guide |
| Appendix B* | Complimentary Products Guide |


*Can be found at www.scccombustion.com.

# 1-1: Introduction

The LMV5 Burner / Boiler Management System (BMS) is ideally suited for use with steam boilers, hot water boilers, thermal fluid heaters, and industrial burners. The LMV5 is extremely flexible, and encompasses the following features:

- Flame safeguard (independent processor)
- Fuel-air ratio control
- Load control / full PID control for pressure or temperature
- Integrated $O_2$ trim
- Variable Frequency Drive (VFD) control
- Fuel usage monitoring
- Efficiency monitoring
- Simultaneous operation of up to 5 rotary actuators (up to 6 connected)
- Dual setpoints
- Modbus communication
- Remote setpoint or remote firing rate from building automation or external controller
- Flue gas recirculation hold functions (LMV52)
- Thermal shock protection
- Valve proving / valve leak testing
- Dual flame scanner options

**Figure 1-1.1: The Main Components of an LMV5 System**

# 1-2: LMV5 System Builder

The LMV5 Linkageless Burner Management System is comprised of many components in addition to the LMV5 itself. Use the following pages to choose the components needed for your specific application. See pages 21-25 for an LMV5 system order sheet. For additional technical information about any of the products listed, refer to Appendix B.

## Control Panel Components

Base Unit – Qty (1) Required

Choose one of the following LMV5 options. See page 27 for mounting information.

| | |
|---|---|
| **LMV51.040C1** | Dual fuel burner control with electronic fuel-air ratio control of up to 3 actuators (4 connected). Requires an external PID controller |
| **LMV51.140C1** | Same features as LMV51.040C1. Includes a PID load controller capable of temperature and / or pressure control and a programmable analog output |
| **LMV52.240B1** | Same features as LMV51.140C1 for up to 5 actuators (6 connected). Includes a closed loop VFD control, integrated $O_2$ trim, fuel meter reading (gas and oil), and temperature / time based FGR hold |
| **LMV52.440B1** | Same features as LMV52.240B1 as well as enhanced $O_2$ trim control designed for low $NO_x$ mesh-style pre-mix burners and high percentage FGR (>25%) applications |

Transformer – Qty (1) or (2) Required

At least one transformer is required per LMV5. A second transformer may be necessary depending on the size and number of actuators present in the system (see Section 2 – Wiring). Refer to page 29 of this section for mounting information.

| | |
|---|---|
| **AGG5.210** | 120 VAC to 12 VAC transformer (three secondaries) |

# Control Panel Components (continued)

## Display – Qty (1) Required

Each LMV5 must be equipped with one AZL52.40B1 display. See page 28 for mounting information and panel cutout dimensions.

| | | |
|---|---|---|
| | **AZL52.40B1** | Display with Modbus port, PC port, backlight, six languages available |

## Display Cable – Qty (1) Required

Each LMV5 must be equipped with a cable to connect the AZL52 display to the LMV5.

| | | |
|---|---|---|
| | **AGG5.635** | Pre-made 9 foot cable for connecting the AZL52 display to the LMV5 |

## Base Plug Set – Qty (1) Required

The terminal plug sets for the LMV5 are sold separately. Each LMV5 needs one base plug set. Additional plug sets are available (see "Control Panel Spare Parts").

| | | |
|---|---|---|
| 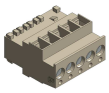 | **AGG5.720** | Plug set containing all terminals for a typical LMV5 system. Will accommodate a system with $O_2$ trim, three actuators, one transformer, and no fuel meters |
| 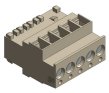 | **AGG5.7COMPLETE** | Plug set containing all terminals necessary for a maximum LMV5 system. Will accommodate a system with a VFD, $O_2$ trim, six actuators, two transformers, and two fuel meters |

## Strain Relief – Qty (1) Required

A strain relief is required to ground the CANbus shield to the LMV5.

| | | |
|---|---|---|
| | **AGG5.110** | Strain relief and actuator CANbus grounding |

## Control Panel Components (continued)

### Touchscreens – Optional

Touchscreen kits are available to provide a human machine interface for the LMV5. Kits come with a touchscreen and a plate kit with all necessary inputs and outputs. Standard communication is via Modbus TCP/IP. Other communication types are available. For more technical information about touchscreens, refer to Document No. TS-1000.

| | | |
|---|---|---|
| | **TS…** | Touchscreen kits with 6” or 10” touchscreen, power supply, interconnect terminals, and optional PLC |

### LMV5 Mounting Brackets – Qty (2) Recommended But Not Required

Recommended brackets for mounting the LMV5 in an electrical enclosure to offset the base unit from the subpanel, allowing easy access to plugs. Two brackets are needed per LMV5.

| | | |
|---|---|---|
| | **BR-LMV5** | Brackets for mounting an LMV5 in an electrical enclosure |

### Control Panel Spare Parts – Not Required

The LMV5 has three replaceable fuses: one main power fuse and two secondary CANbus fuses. Each LMV5 comes with spares for each fuse. Additional spare fuses are available if necessary.

| | | |
|---|---|---|
| | **FUSE6.3A-SLOW** | 5 pack of LMV5 primary fuses - 6.3A, 250V, 5x20mm, slow blow, for 120 VAC power |
| | **FUSE4.0A-SLOW** | 5 pack of LMV5 secondary CANbus fuses – 4.0A, 250V, 5x20mm, slow blow, for 12 VAC power |

## Control Panel Components (continued)

Replacement green connectors are available if necessary. 4-pin connectors are for terminals X52, X71, and X72. 5-pin connectors are for terminals X60, X61, X62, X70, and on each actuator and $O_2$ module. 6-pin connectors are for terminals X50, X51, and X73.

| | | |
|---|---|---|
| | **1840382(5)** | 5 pack of spare 4-pin green connectors |
| | **1840395(5)** | 5 pack of spare 5-pin green connectors |
| | **1840405(3)** | 3 pack of spare 6-pin green connectors |

An extra set of transformer terminals is required if using a second transformer.

| | | |
|---|---|---|
| | **AGG5.2PLUGS** | Extra set of terminals for a second transformer (PRI, SEK1, SEK2) |

An optional spark quencher is available to reduce voltage spikes typically caused by closing a normally open vent valve.

| | | |
|---|---|---|
| | **XEB0471** | Spark quencher for reducing voltage spikes |

An optional converter is available to allow communication between RS-485 devices and the LMV5 which utilizes the RS-232 communication protocol.

| | | |
|---|---|---|
| | **TS-5X-KT** | RS232 to RS485 DIN rail converter kit |

# Air Damper Assembly

Actuator – Qty (1) Required

Choose one of the following actuators for the air damper. For more information, refer to Document No. N7814 (SQM4… actuators) or Document No. N7818 (SQM9… actuators). SQM9… actuators are rated NEMA 4.

| | |
|---|---|
| **SQM45.295B9** | 27 in-lb torque, 10mm “D” shaft, 10-120 seconds |
| **SQM45.295B9-N4** | 27 in-lb torque, 10mm “D” shaft, 10-120 seconds, NEMA 4 |
| **SQM48.497B9** | 177 in-lb torque, 14mm keyed shaft, 30-120 seconds |
| **SQM48.497B9-N4** | 177 in-lb torque, 14mm keyed shaft, 30-120 seconds, NEMA 4 |
| **SQM48.697B9** | 310 in-lb torque, 14mm keyed shaft, 60-120 seconds |
| **SQM48.697B9-N4** | 310 in-lb torque, 14mm keyed shaft, 60-120 seconds, NEMA 4 |
| **SQM91.391A9** | 600 in-lb torque, 25mm keyed shaft, 30-120 seconds |

Coupling – Qty (1) Required (Provided With Some Mounting Brackets – See Below)

Zero-lash, flexible couplings are available for each actuator. For more information, refer to Document No. CPBK-1000.

| | |
|---|---|
| **CCM10DCA…** | Flexible couplings for SQM45… actuators |
| **CFM14KCB…** | Flexible couplings for SQM48… actuators |
| **CJM25KCA…** | Flexible couplings for SQM91… actuators |

## Air Damper Assembly (continued)

Mounting Bracket Kits - Optional

Modular bracket kits are available to assist in mounting any SQM… actuator to a variety of valves or air dampers. A coupling is necessary when using a modular bracket kit. For more information, refer to Document No. CPBK-2000.

| | |
|---|---|
| **BR-AS…** | Modular bracket kits for mounting SQM… actuators to a variety of valves or dampers |

When retrofitting a Cleaver Brooks boiler, the following kits are available for the rotary air damper. No additional couplings are needed with these retrofit kits. Refer to Document No. CPBK-4000 for technical information or Document No. CPBK-4100 for installation instructions.

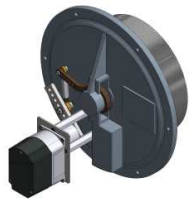

| | |
|---|---|
| **BR-48CBAIR** | Bracket for mounting an SQM48… actuator to a Cleaver Brooks rotary air damper |
| **BR-3345CBAIR** | Bracket for mounting an SQM45… actuator to a Cleaver Brooks rotary air damper |

When using a Lucoma air damper, the following actuator mounting kits are available. No additional couplings are needed with these mounting kits. Refer to Document No. CPBK-3000 for technical information or Document No. CPBK-3100 for installation instructions.

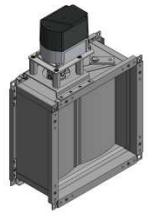

| | |
|---|---|
| **BR-SQM48-LUC** | Bracket for mounting an SQM48… actuator to an 8x8 through 28x28 Lucoma air damper |
| **BR-SQM3345-LUC** | Bracket for mounting an SQM45… actuator to an 8x8 through 28x28 Lucoma air damper |

# Gas Firing Rate Control Valve

Valve Actuator Assemblies – Qty (1) Required if Firing Gas

Pre-built valve actuator assemblies are available that mount an SQM45… actuator to a VKG… gas butterfly valve. A variety of VKG… valves are available from 1/2" to 4". For more information about VKG… valves, refer to Document No. CVLV-2000. For more information about valve actuator assemblies using VKG… valves, refer to Document No. VA-1000.

| | |
|---|---|
| **VA45.2-NF-050** | SQM45 to 1/2" full port firing rate valve |
| **VA45.2-NF-075** | SQM45 to 3/4" full port firing rate valve |
| **VA45.2-NF-100** | SQM45 to 1" full port firing rate valve |
| **VA45.2-NM-100** | SQM45 to 1" medium port firing rate valve |
| **VA45.2-NF-125** | SQM45 to 1-1/4" full port firing rate valve |
| **VA45.2-NM-125** | SQM45 to 1-1/4" medium port firing rate valve |
| **VA45.2-NF-150** | SQM45 to 1-1/2" full port firing rate valve |
| **VA45.2-NM-150** | SQM45 to 1-1/2" medium port firing rate valve |
| **VA45.2-NR-150** | SQM45 to 1-1/2" reduced port firing rate valve |
| **VA45.2-NF-200** | SQM45 to 2" full port firing rate valve |
| **VA45.2-NM-200** | SQM45 to 2" medium port firing rate valve |
| **VA45.2-NR-200** | SQM45 to 2" reduced port firing rate valve |
| **VA45.2-NF-250** | SQM45 to 2-1/2" full port firing rate valve |
| **VA45.2-NM-250** | SQM45 to 2-1/2" medium port firing rate valve |
| **VA45.2-NR-250** | SQM45 to 2-1/2" reduced port firing rate valve |
| **VA45.2-NF-300** | SQM45 to 3" full port firing rate valve |
| **VA45.2-NM-300** | SQM45 to 3" medium port firing rate valve |
| **VA45.2-NR-300** | SQM45 to 3" reduced port firing rate valve |
| **VA45.2-NF-400** | SQM45 to 4" full port firing rate valve |
| **VA45.2-NM-400** | SQM45 to 4" medium port firing rate valve |
| **VA45.2-NR-400** | SQM45 to 4" reduced port firing rate valve |

## Gas Firing Rate Control Valve (continued)

Pre-built valve actuator assemblies are available that mount an SQM45… or SQM48… actuator to a VKF… gas butterfly valve. A variety of VKF… valves are available from 1-1/2" to 8". The most common assemblies are listed below. For more information about VKF… valves, refer to Document No. CVLV-1000. For more information about valve actuator assemblies using VKF… valves, refer to Document No. VA-3000.

| | |
|---|---|
| **VA45.2-3.0VKF** | SQM45 to 3" VKF butterfly valve |
| **VA45.2-4.0VKF** | SQM45 to 4" VKF butterfly valve |
| **VA45.2-6.0VKF** | SQM45 to 6" VKF butterfly valve |

## Oil Firing Rate Control Valve

Valve Actuator Assemblies – Qty (1) Required if Firing Oil (Not Using a Cleaver Brooks Oil Valve)

Pre-built valve actuator assemblies are available to mount an SQM45… or SQM48… actuator to a Hauck S, AS, B, F, G, or K series oil valve. For more information about valve actuator assemblies using Hauck oil valves, refer to Document No. VA-4000.

| | |
|---|---|
| **VA…** | Valve actuator assemblies mounting an SQM45… or SQM48… actuator to a Hauck oil valve |

Cleaver Brooks Oil Valve Retrofit Kit - Optional

When retrofitting a Cleaver Brooks boiler, the following kits are available for the oil metering valve. Refer to Document No. CPBK-5000 for technical information or Document No. CPBK-5100 for installation instructions.

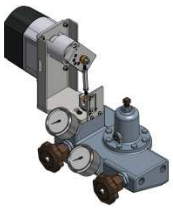

| | |
|---|---|
| **BR-48CBOIL** | Bracket for mounting an SQM48… actuator to a Cleaver Brooks oil metering valve |
| **BR-45CBOIL** | Bracket for mounting an SQM45… actuator to a Cleaver Brooks oil metering valve |

## FGR Control Valve

Valve Actuator Assemblies – Qty (1) Required if Using FGR

Pre-built FGR valve actuator assemblies are available to mount an SQM45… or SQM48… actuator to a high-temperature VKF… butterfly valve. The most commonly used assemblies are listed below. For a list of all assembly options, see Document No. VA-3000. For more information on VKF valves, refer to Document No. CVLV-1000. Contact SCC if an FGR valve actuator assembly larger than 8" is required.

| | |
|---|---|
| **VA48.4-3.0VKF-HT** | SQM48 to 3" high-temp VKF valve assembly |
| **VA48.4-4.0VKF-HT** | SQM48 to 4" high-temp VKF valve assembly |
| **VA48.4-6.0VKF-HT** | SQM48 to 6" high-temp VKF valve assembly |
| **VA48.4-8.0VKF-HT** | SQM48 to 8" high-temp VKF valve assembly |

## Actuator Accessories

CANbus Cable – Qty (1) Required

Special cable is used to connect the actuators and $O_2$ module to the LMV5. This cable may be purchased in 100' or 500' rolls.

| | |
|---|---|
| **AGG5.643(100)** | 100' roll of CANbus cable |
| **AGG5.643** | 500' roll of CANbus cable |

Electrical Cable Cord Grips and Conduit Adapters – Qty (2) Required Per Actuator

SQM45…, SQM48…, and SQM91… actuators come with two M16 threaded electrical connections. Various adapters are available to convert these connections to an English thread. One short and one long adapter are recommended per actuator to offset conduit connections.

| | |
|---|---|
| **ADP-M16XE500(5)** | 5-pack of short M16 to 1/2" NPSM metal conduit adapters, compatible with liquid tight or EMT fittings |

| | |
|---|---|
| **ADP-M16XE500-LONG(5)** | 5 pack of long M16 to 1/2" NPSM metal conduit adapters, compatible with liquid tight or EMT fittings |

| | |
|---|---|
| **7466201040** | M16 to 1/2" NPSM nylon conduit adapter, compatible with liquid tight or EMT conduit fittings |

| | |
|---|---|
| **7466200470** | M16 nylon cord grip |

## Actuator Accessories (continued)

NEMA 4 Kits – Optional

A kit can be added to any SQM4… actuator in order to provide NEMA 4 protection.

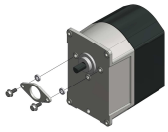

| | |
|---|---|
| **BR-N4-SQM45** | NEMA 4 kit for an SQM45… actuator |
| **BR-N4-SQM48** | NEMA 4 kit for an SQM48… actuator |

Explosion Proof Housing – Optional

An explosion proof housing is available for the SQM48.697B9 actuator.

| | |
|---|---|
| **LMV5-XPR-SQM48** | Explosion proof housing for an SQM48.697B9 actuator |

## Flame Scanners

Infrared Flame Scanners – Qty (1) Required Unless Using a QRA75.A17 Flame Scanner

Two infrared flame scanners are available: one side viewing and one forward viewing. For technical information about QRI… flame scanners, refer to Document No. N7719.

| | |
|---|---|
| **QRI2A2.B180B** | Self-check infrared flame scanner, forward viewing |
| **QRI2B2.B180B** | Self-check infrared flame scanner, side viewing |

Ultraviolet Flame Scanners – Qty (1) Required Unless Using a QRI… Flame Scanner

One ultraviolet flame scanner is available for use with the LMV5. For technical information about the QRA75… flame scanner, refer to Document No. N7712.

| | |
|---|---|
| **QRA75.A17** | Self-check ultraviolet flame scanner, side viewing, supplied with mounting clamp |

# Flame Scanner Accessories

QRA75 Wiring Cable – Qty (1) Required per QRA75.A17 Flame Scanner

A pre-made 12 foot cable is required when using the QRA75 flame scanner. For more information, refer to Document No. N7712.

| | | |
|---|---|---|
| | **AGM23U** | Pre-made 12 foot cable for use with the QRA75… flame scanner, supplied with 1/2” NPSM conduit adapter. |

QRI… Accessories - Optional

Mounting accessories are available for both the forward viewing and side viewing QRI… flame scanners. For more information, refer to Document No. N7719.

| | | |
|---|---|---|
| | **AGG2.110** | Kit for mounting forward viewing scanner QRI2A2.B180B on a flame tube. Comes with clamp, mounting sleeve, thermal barrier with 3/4” NPSM connection, and heat insulation glass |
| | **AGG2.120** | Pg9 thread to 1/2” NPSM conduit connection adapter for use with any QRI… flame scanner |
| | **AGG90.U** | Right angle adapter for mounting side viewing scanner QRI2B2.B180B on a flame tube. Comes with 3/4” NPSM female thread connection |
| | **LMV5-XPR-QRI** | Explosion proof housing for forward viewing scanner QRI2A2.B180B. Comes with 1” NPT male process connection and 1/2” NPT female conduit connection |

## Flame Scanner Accessories (continued)

QRA75… Accessories - Optional

Mounting accessories are available for the QRA75… flame scanner. For more information, refer to Document No. N7712.

| | | |
|---|---|---|
| | **AGG16.U** | Right angle adapter for mounting a QRA75 flame scanner. Comes with a 1" NPSM female thread connection |
| | **THERMAL-1X75** | Thermal barrier for use with the QRA75 flame scanner along with accessory AGG16.U. Adapts a 1" NPSM thread to a female 3/4" NPT connection |
| | **AGG02** | Heat insulating glass with spring washer and O-ring, for applications where the temperature at the scanner will exceed 176 °F, to be mounted inside thermal barrier THERMAL-1X75 |
| | **AGG03** | Magnifying lens with spring washer and O-ring for increased sensitivity, to be mounted inside thermal barrier THERMAL-1X75 |

# Sensors

Pressure Sensors – Qty (1) Required for Steam Boilers

A wide range of pressure sensors is available for steam boilers. All sensors have a 1/4" NPT process connection and a 1/2" NPT conduit connection. Sensors are available with either a 4-20 mA or 0-10 Vdc output signal. All available 4-20 mA sensors are listed below. To order a 0-10 Vdc sensor, change the underlined digit to a 1. The 0-100 PSI sensor is only available with a 4-20 mA signal. For more information on 7MF pressure sensors, refer to Document No. SEN-2000.

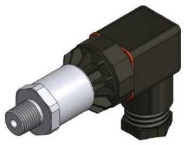

| | |
|---|---|
| **7MF1565-4BB00-5EA1** | 0-15 PSI range, 4-20 mA signal |
| **7MF1565-4BE00-5EA1** | 0-30 PSI range, 4-20 mA signal |
| **7MF1565-4BF00-5EA1** | 0-60 PSI range, 4-20 mA signal |
| **7MF1565-4BG00-5EA1** | 0-100 PSI range, 4-20 mA signal |
| **7MF1565-4CA00-5EA1** | 0-150 PSI range, 4-20 mA signal |
| **7MF1565-4CB00-5EA1** | 0-200 PSI range, 4-20 mA signal |
| **7MF1565-4CD00-5EA1** | 0-300 PSI range, 4-20 mA signal |
| **7MF1565-4CE00-5EA1** | 0-500 PSI range, 4-20 mA signal |
| **7MF1565-4CF00-5EA1** | 0-750 PSI range, 4-20 mA signal |

## Sensors (continued)

Temperature Sensors – Qty (1) Required for Hot Water Boilers, Optional for Other Applications

One temperature sensor is needed to measure water temperature on hot water boilers. Additionally, one may be needed for low fire hold on a steam boiler, hot standby on a steam boiler, or ambient and stack temperatures for efficiency calculations or FGR hold features. The most commonly used temperature sensors are listed below. For a list of all temperature sensor options as well as technical instructions for all available temperature sensors, refer to Document No. SEN-1000.

| | | |
|---|---|---|
| | **QAE2020.001** | 100 Ohm, 3-wire, platinum RTD used to measure water temperature on hot water boilers<br>Range: -4 to 374 °F |
| | **QAE2012.001** | 1000 Ohm, 2-wire, platinum RTD used to measure water temperature for low fire hold or hot standby on steam boilers. Also recommended to measure ambient air temperature for LMV52.4 applications<br>Range: -4 to 374 °F |
| | **QAE2012.9002** | 1000 Ohm, 2-wire, platinum RTD used to measure water temperature on hot oil heaters and steam boilers operating over 150 PSI<br>Range: -50 to 900 °F |
| | **QAC22** | 1000 Ohm, 2-wire, nickel RTD used to measure ambient air temperature (required for efficiency calculations)<br>Range: -58 to 158 °F |
| | **QAM-P210** | 1000 Ohm, 2-wire, platinum RTD used to measure flue gas temperature (required for efficiency calculations and FGR low temperature hold features)<br>Range: -50 to 900 °F |

# Variable Frequency Drive (VFD) Components

## Variable Frequency Drives (VFDs) - Optional

Pre-programmed Variable Frequency Drives (VFDs) are available for use with an LMV52. Braking resistors and line / load reactors are available as accessories.

| | | |
|---|---|---|
| | **DR…** | Pre-programmed VFDs with LMV52 programming and wiring instructions |

## Speed Sensor Mounting Kit – Qty (1) Required per VFD

Because the LMV52 requires speed feedback when using a VFD, one of the following speed sensor kits is required if a VFD is present.

| | | |
|---|---|---|
| | **AGG5.305** | Speed sensor and associated mounting kit with connections available for mounting directly to ½" or ¾" conduit. Includes speed sensor, 6-foot cable, 3-finger speed wheel, O-ring for a watertight seal, and necessary mounting hardware<br>Range: 300-6300 RPM |
| 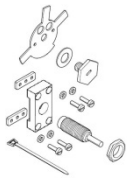 | **AGG5.310** | Speed sensor and associated mounting kit. Includes speed sensor, 6-foot cable, 3-finger speed wheel, and necessary mounting hardware<br>Range: 300-6300 RPM |
| | **LMV5-XPR-SS** | Explosion proof speed sensor and associated mounting kit with connections available for mounting directly to ½" or ¾" conduit. Includes speed sensor, signal amplifier, 32-foot cable, 3-finger speed wheel, and necessary mounting hardware<br>Range: 300-6300 RPM |

# O2 Trim Components

## O2 Module – Qty (1) Required for O2 Trim

For $O_2$ trim, the following CANbus module is required to connect the $O_2$ sensor to the LMV52.

| | | |
|---|---|---|
| | **PLL52.110A100** | Module to connect $O_2$ sensor to an LMV52, supplied with (6) M16 to 1/2" NPT conduit adapters compatible with liquid tight conduit fittings |

## O2 Sensor – Qty (1) Required for O2 Trim

The following $O_2$ sensor is necessary for running $O_2$ trim on an LMV52. For technical information on the $O_2$ sensor, see Document No. P7842.

| | | |
|---|---|---|
| | **QGO20.000D17** | $O_2$ sensor, internally heated, zirconium dioxide measuring cell, supplied with (2) M16 to 1/2" NPT conduit adapters compatible with liquid tight fittings<br>Max. flue gas temperature: 575 °F |
| | **QGO21.000D17** | $O_2$ sensor for heavy oil applications, internally heated, zirconium dioxide measuring cell, supplied with (2) M16 to 1/2" NPT conduit adapters compatible with liquid tight fittings<br>Max. flue gas temperature: 575 °F |

# O2 Trim Components (continued)

Flue Gas Collector – Qty (1) Required for O2 Trim

A flue gas collector is required to mount the $O_2$ sensor in the stack. Four options are available as described below.

| | |
|---|---|
| **AGO20.001SDS-KT** | Weldless flue gas collector for QGO20… sensor, 7.25” long, to be mounted into stacks 12-16” in diameter, not to be used on rectangular stacks |
| **AGO20.002LDS-KT** | Weldless flue gas collector for QGO20… sensor, 10.5” long, to be mounted into stacks 18-36” in diameter, not to be used on rectangular stacks |

| | |
|---|---|
| **AGO20.001A** | Flue gas collector for QGO20… sensor, 7.25” long, to be welded into stacks up to 16” in diameter |
| **AGO20.002A** | Flue gas collector for QGO20… sensor, 10.5” long, to be welded into stacks larger than 16” in diameter |
| **AGO21.000A** | Flue gas collector for QGO21… sensor, 1.89” long, to be welded into stacks |

O2 Sensor Cable – Qty (1) Recommended But Not Required

An optional cable is available to easily connect the $O_2$ sensor (QGO…) to the $O_2$ module (PLL…).

| | |
|---|---|
| **C8120(35)** | 6-conductor, 18 AWG, shielded cable to connect the $O_2$ sensor to the $O_2$ module, 35 feet long |

# ACS450 Software for Laptop (Optional)

The ACS450 software for the LMV5 offers many features including parameter backups, startup reports, AZL software updates, and trending. The software may be downloaded at www.scccombustion.com.

## Cables - Optional

To use the ACS450 software, cables are necessary to connect the AZL display to a PC.

| | | |
|---|---|---|
| | **P454-006** | Null modem cable, 6 feet long, 9-pin male to 9-pin female DB9 connection, connects AZL to PC serial port |
| | **ACS-AC-FTDIUSB1** | USB-to-serial adapter with FTDI chipset, used in conjunction with null modem cable to connect AZL to PC USB port for PCs with no DB9 serial port |

# Typical LMV52 System for a Cleaver Brooks Retrofit

Components for a typical LMV52 retrofit on a Cleaver Brooks boiler are listed below:

**Control Panel Components**

| | | |
|---|---|---|
| 1 | LMV52.240B1 | Dual fuel burner control, fuel-air ratio control, VFD control, $O_2$ trim |
| 1 | AGG5.210 | 120 VAC to (3) 12 VAC transformer |
| 1 | AZL52.40B1 | Display with Modbus port, PC port, six languages available |
| 1 | AGG5.635 | Pre-made 9 foot cable connecting an LMV5 to the AZL display |
| 1 | AGG5.720 | Base plug set with all terminals for a typical LMV5 system |
| 1 | AGG5.110 | Strain relief and actuator CANbus grounding |
| 2 | BR-LMV5 | Brackets for mounting an LMV5 in an electrical enclosure |

**Air Damper Assembly**

| | | |
|---|---|---|
| 1 | SQM48.497B9 | Actuator, 177 in-lb torque, 14mm keyed shaft, 30-120 sec running time |
| 1 | BR-48CBAIR | CB air damper bracket retrofit kit for SQM48 actuator |

**Gas Firing Rate Control Valve**

| | | |
|---|---|---|
| 1 | VA45.2-NF-300 | SQM45.295B9 to 3” full port VKG butterfly valve assembly |

**Oil Firing Rate Control Valve**

| | | |
|---|---|---|
| 1 | SQM45.295B9 | Actuator, 27 in-lb torque, 10mm “D” shaft, 10-120 sec running time |
| 1 | BR-45CBOIL | CB fuel oil controller bracket retrofit kit for SQM45 actuator |

**Actuator Accessories**

| | | |
|---|---|---|
| 1 | AGG5.643(100) | 100’ roll of CANbus cable |
| 1 | ADP-M16XE500(5) | 5-pack of M16 to 1/2” NPSM metal conduit adapters |
| 1 | ADP-M16XE500-LONG(5) | 5-pack of long M16 to 1/2” NPSM metal conduit adapters |

**Flame Scanner**

| | | |
|---|---|---|
| 1 | QRI2A2.B180B | Self-check infrared flame scanner, forward viewing |

**Flame Scanner Accessories**

| | | |
|---|---|---|
| 1 | AGG2.110 | Kit for mounting forward viewing QRI… flame scanner on a flame tube |
| 1 | AGG2.120 | Pg9 to 1/2” NPSM conduit connection adapter for QRI… flame scanner |

**Sensors**

| | | |
|---|---|---|
| 1 | 7MF1565-4BE00-5EA1 | Pressure sensor, 0-30 PSI, 4-20 mA signal |
| 1 | QAC22 | 1000 Ohm, 2-wire, nickel RTD for ambient air temperature |
| 1 | QAM-P210 | 1000 Ohm, 2-wire, platinum RTD for flue gas temperature |

**Variable Frequency Drive (VFD) Components**

| | | |
|---|---|---|
| 1 | AGG5.305 | Speed sensor and associated mounting kit for VFD control |

**$O_2$ Trim Components**

| | | |
|---|---|---|
| 1 | PLL52.110A100 | CANbus module to connect QGO $O_2$ sensor to LMV52 |
| 1 | QGO20.000D17 | $O_2$ sensor with zirconium dioxide measuring cell |
| 1 | AGO20.002LDS-KT | Weldless flue gas collector for stacks 18-36” in diameter |
| 1 | C8120(35) | 6-conductor shielded cable to connect the $O_2$ module and $O_2$ sensor |

**LMV5 SYSTEM ORDER SHEET**
**Email: customerservice@scccombustion.com Fax: (224) 366-8455**

| | | | |
|---|---|---|---|
| **Company Name** | | **PO#** | |
| **Required Ship Date** | | **Ship To Address** | |
| **Shipping Method** | | | |

| | Description | | Part Number | Qty |
|---|---|---|---|---|
| **Control Panel Components** | **Base Unit** *(Qty 1 Required)* | Float/bump | LMV51.040C1 | |
| | | Load control | LMV51.140C1 | |
| | | VFD/$O_2$ trim/fuel meter | LMV52.240B1 | |
| | | Advanced $O_2$ trim | LMV52.440B1 | |
| | **Transformer** *(Qty 1 or 2 Required)* | 120V to (3) 12V transformer | AGG5.210 | |
| | **Display Unit** *(Qty 1 Required)* | Display unit w/ Modbus | AZL52.40B1 | |
| | **Display Cable** (*Qty 1 Required)* | 9' AZL to LMV5 cable | AGG5.635 | |
| | **Plug Set** *(Qty 1 Required)* | Typical base plug set | AGG5.720 | |
| | | Maximum system plug set | AGG5.7COMPLETE | |
| | **Strain Relief** *(Qty 1 Required)* | For CANbus grounding | AGG5.110 | |
| | **Touchscreen Kit** *(Optional)* | Write in part number (see Doc. No. TS-1000) | | |
| | **LMV5 Mounting Brackets** *(Qty 2 Recommended)* | For electrical enclosure | BR-LMV5 | |
| | **Control Panel Spare Parts** *(Optional)* | 120V main fuse | FUSE6.3A-SLOW | |
| | | 12V CANbus fuse | FUSE4.0A-SLOW | |
| | | 5 pack of 4-pins | 1840382(5) | |
| | | 5 pack of 5-pins | 1840395(5) | |
| | | 3 pack of 6-pins | 1840405(3) | |
| | | Transformer plugs | AGG5.2PLUGS | |
| | | Spark quencher | XEB0471 | |
| | | RS-232 to RS-485 converter kit | TS-5X-KT | |
| **Air Damper Assembly** | **Actuator** *(Qty 1 Required)* | 27 in-lb, 10mm "D" | SQM45.295B9 | |
| | | SQM45.295B9 with NEMA 4 kit | SQM45.295B9-N4 | |
| | | 177 in-lb, 14mm keyed | SQM48.497B9 | |
| | | SQM48.497B9 with NEMA 4 kit | SQM48.497B9-N4 | |
| | | 310 in-lb, 14mm keyed | SQM48.697B9 | |
| | | SQM48.697B9 with NEMA 4 kit | SQM48.697B9-N4 | |
| | | 600 in-lb, 25mm keyed | SQM91.391A9 | |
| | **Coupling** *(Qty 1 Required)* | Write in part number (see Doc. No. CPBK-1000) | | |
| | **Mounting Bracket Kits** *(Optional)* | Write in part number (see Doc. No. CPBK-2000) | | |
| | **Cleaver Brooks Retrofit Kits** *(Optional)* | Kit for SQM48 | BR-48CBAIR | |
| | | Kit for SQM45 | BR-3345CBAIR | |
| | **Lucoma Air Damper Mounting Brackets** *(Optional)* | Kit for SQM48 | BR-SQM48-LUC | |
| | | Kit for SQM45 | BR-SQM3345-LUC | |

Intentionally Left Blank

| | Description | | Part Number | Qty |
|---|---|---|---|---|
| **Gas Firing Rate Valve** | **Valve Actuator Assemblies** *(Qty 1 Required if Firing Gas)* | Write in part number (see Doc. No. VA-1000 or VA-3000) | | |
| **Oil Firing Rate Control Valve** | **Valve Actuator Assemblies** *(Qty 1 Required if Firing Oil and Not Using a Cleaver Brooks Oil Valve)* | Write in part number (see Doc. No. VA-4000) | | |
| | **Cleaver Brooks Retrofit Kits** *(Optional)* | Kit for SQM48 | BR-48CBOIL | |
| | | Kit for SQM45 | BR-45CBOIL | |
| **FGR Control Valve** | **Valve Actuator Assemblies** *(Qty 1 Required if Using FGR)* | 3" high temp assembly | VA48.4-3.0VKF-HT | |
| | | 4" high temp assembly | VA48.4-4.0VKF-HT | |
| | | 6" high temp assembly | VA48.4-6.0VKF-HT | |
| | | 8" high temp assembly | VA48.4-8.0VKF-HT | |
| | | Write in part number (see Doc. No. VA-3000) | | |
| **Actuator Accessories** | **CANbus Cable** *(Qty 1 Required)* | 100' roll | AGG5.643(100) | |
| | | 500' roll | AGG5.643 | |
| | **Electrical Cable Adapters** *(Optional)* | Short M16 to 1/2" metal (5) | ADP-M16XE500(5) | |
| | | Long M16 to 1/2" metal (5) | ADP-M16XE500-LONG(5) | |
| | | M16 to 1/2" nylon | 7466201040 | |
| | | M16 cord grip | 7466200470 | |
| | **NEMA 4 Kits** *(Optional)* | SQM45 NEMA 4 kit | BR-N4-SQM45 | |
| | | SQM48 NEMA 4 kit | BR-N4-SQM48 | |
| | **Explosion Proof Housing** *(Optional)* | SQM48 exp. proof housing | LMV5-XPR-SQM48 | |
| **Flame Scanners** | **Flame Scanners** *(Qty 1 Required)* | IR forward view | QRI2A2.B180B | |
| | | IR side view | QRI2B2.B180B | |
| | | UV side view | QRA75.A17 | |
| **Flame Scanner Accessories** | **QRA75 Cable** *(Qty 1 Required per QRA75)* | 12' cable | AGM23U | |
| | **QRI Accessories** *(Optional)* | Mount for forward view | AGG2.110 | |
| | | 1/2" conduit adapter | AGG2.120 | |
| | | Mount for side view | AGG90.U | |
| | | Explosion proof housing | LMV5-XPR-QRI | |
| | **QRA Accessories** *(Optional)* | Mount for side view | AGG16.U | |
| | | Thermal barrier | THERMAL-1X75 | |
| | | Heat insulating lens | AGG02 | |
| | | Magnifying lens | AGG03 | |
| **Sensors** | **Pressure Sensors** *(Qty 1 Required for Steam Boilers)* | Write in part number (see Doc. No. SEN-2000) | | |
| | **Temperature Sensors** *(Qty 1 Required for Hot Water Boilers, Optional for Other Applications)* | Pt100, 3-wire, -4...374°F | QAE2020.001 | |
| | | Pt1000, 2-wire, -4...374°F | QAE2012.001 | |
| | | Pt1000, 2-wire, -50...900°F | QAE2012.9002 | |
| | | Ambient air -58...158°F | QAC22 | |
| | | Flue gas -50...900°F | QAM-P210 | |
| | | Write in part number (see Doc. No. SEN-1000) | | |
| **VFDs** | **VFDs, Brake Resistors, Line / Load Reactors** | Write in part number | | |
| | **Speed Sensor** *(Qty 1 Required per VFD)* | Speed sensor kit for conduit | AGG5.305 | |
| | | Speed sensor kit w/o conduit | AGG5.310 | |
| | | Explosion proof speed sensor kit | LMV5-XPR-SS | |

Intentionally Left Blank

| | | | | |
|---|---|---|---|---|
| **$O_2$ Trim Components** | **$O_2$ Module** *(Qty 1 Required for $O_2$ Trim)* | Connects QGO to LMV52 | PLL52.110A100 | |
| | **$O_2$ Sensor** *(Qty 1 Required for $O_2$ Trim)* | Max temp 575°F | QGO20.000D17 | |
| | | Sensor for heavy oil applications | QGO21.000D17 | |
| | **Flue Gas Collector** *(Qty 1 Required for $O_2$ Trim)* | Weldless, up to 16" stack | AGO20.001SDS-KT | |
| | | Weldless, over 16" stack | AGO20.002LDS-KT | |
| | | Weld, up to 16" stack | AGO20.001A | |
| | | Weld, over 16" stack | AGO20.002A | |
| | | Weld, for heavy oil applications | AGO21.000A | |
| | **$O_2$ Cable** *(Qty 1 Required for $O_2$ Trim)* | 6-conductor, 35' length | C8120(35) | |
| **ACS 450** | **Cables** *(Optional)* | Null modem | P454-006 | |
| | | USB-to-serial | ACS-AC-FTDIUSB1 | |

Intentionally Left Blank

# 1-3: Mounting

### LMV5 Controller

The LMV5 must be mounted inside an enclosure that will protect it from dirt and moisture. The unit is mounted by four screws (M5 x 0.8mm thread, #2 Phillips drive) that are captive in each corner. The panel, which the unit sits on, should be drilled and tapped to accommodate these screws. Alternatively, two mounting brackets are available that use clearance holes to mount the LMV5 into the panel and space the LMV5 approximate 1.25" off the back of the panel.

It should be noted that the mounting screws do not have excessive play, so the spacing of the mounting holes must be accurate. This can be achieved by clamping or securing the LMV5 in the desired position. Then use the captive screws to score (4) circles into the panel. Do this by turning each of the mounting screws clockwise while applying pressure to the screwdriver.

During the mounting process, consideration should also be given to the various plugs and wires that must be attached to the LMV5. Electrical connections are made via plugs that are located in the face, top and bottom of the unit. A space of at least (2) inches is recommended above and below the LMV5. The recommended total space to leave for the LMV5 is 12" x 12" x 4" because the overall dimensions of the LMV5 are 9.84" x 7.87" x 3.25".

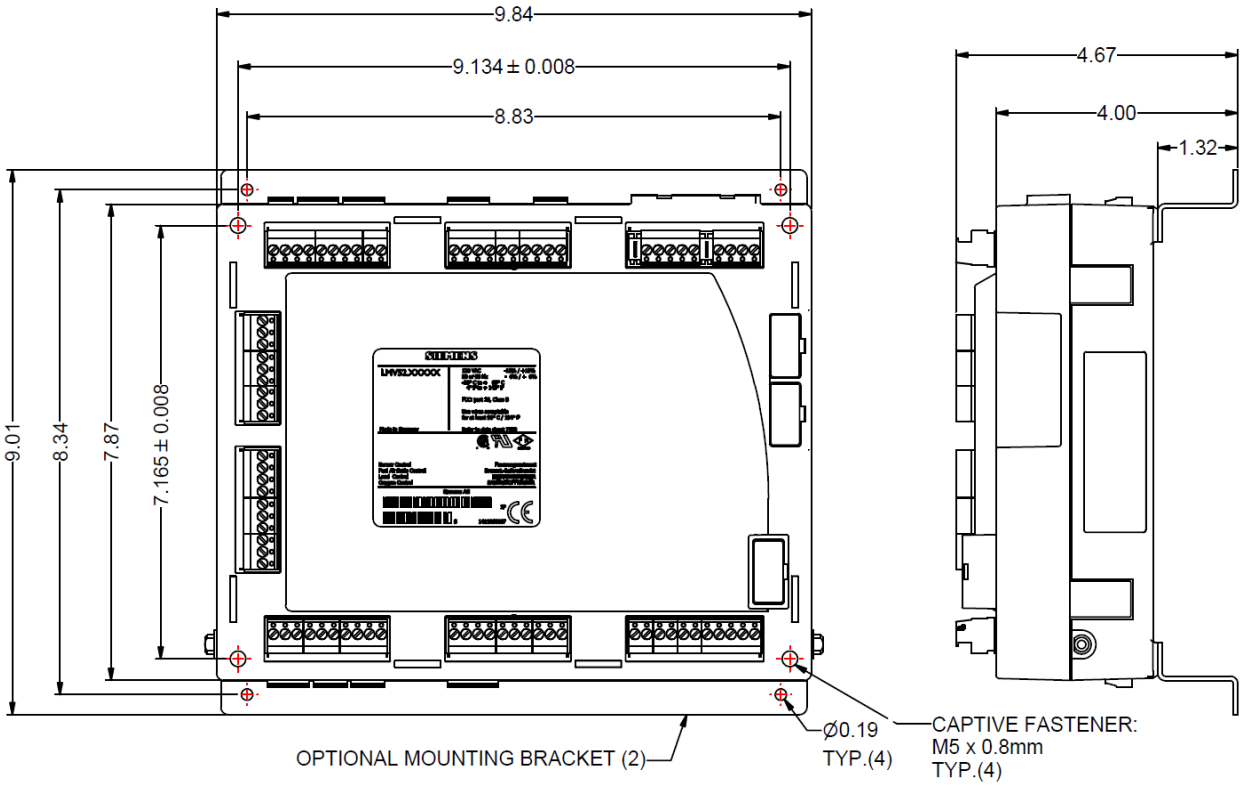


**Figure 1-3.1: LMV5 Dimensions (inches)**

**AZL5 Display**

The AZL5 is designed to be mounted in a rectangular cutout through the face / door of an electrical enclosure. It has one screw on the top and another on the bottom that engage small plastic tabs which will swing out when the screw is tightened clockwise; the screw can be loosened to retract the tab and increase clearance before tightening. The tab will pinch the sheet metal of the enclosure door between itself and the AZL5 gasket. This facilitates easy removal and replacement of the AZL5 since it is designed to be taken out of the enclosure face and held in the hands for setup and commissioning.

The AZL5 connects (via the CANbus port on its bottom end) to the LMV5 at terminal X50 with CANbus cable **AGG5.635**. The 9-pin CANbus connector requires a clearance of approximately 2.5" below the bottom of the AZL5 on the inside of the door of the enclosure.

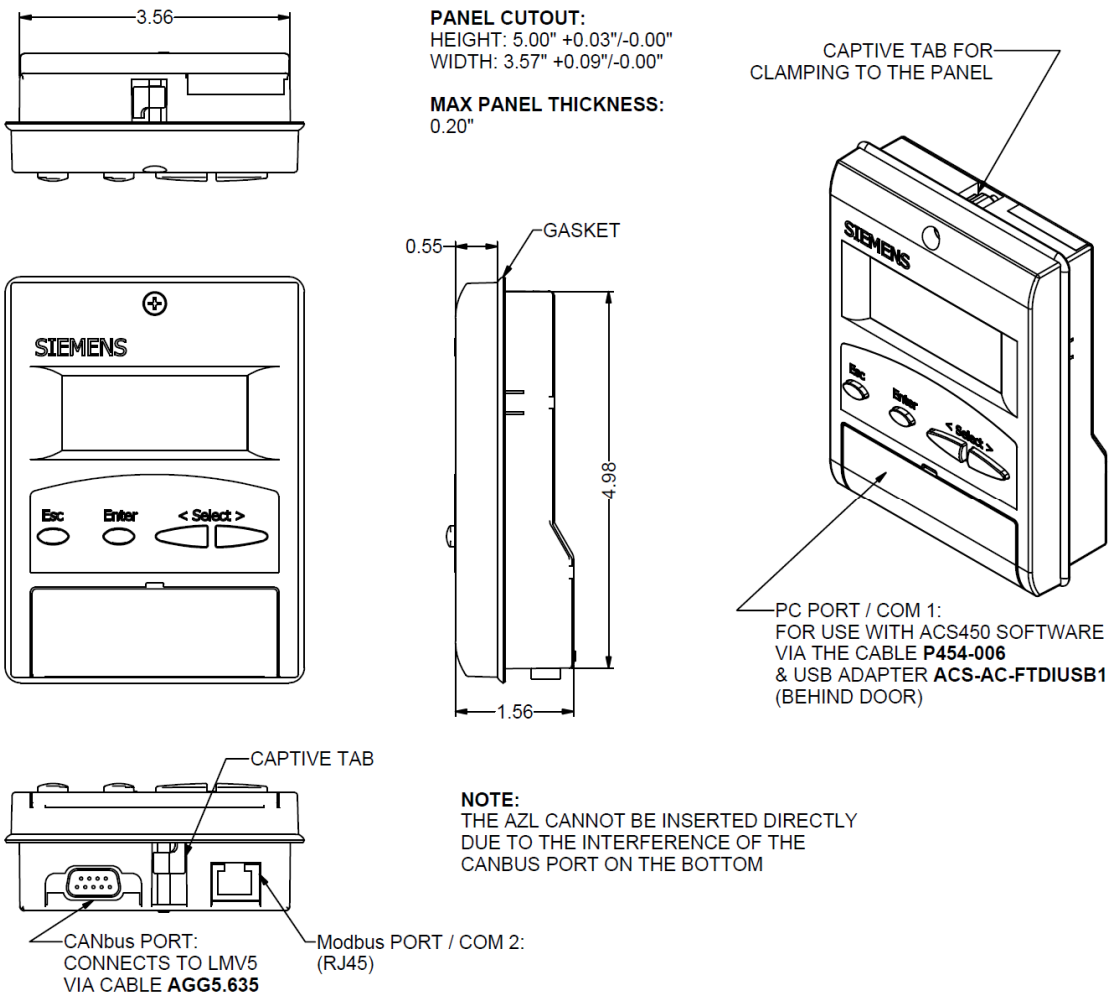


**Figure 1-3.2: AZL5 Dimensions (inches)**

## AGG5.210 Transformer

The AGG5.210 transformer supplies 12 VAC power to the LMV5 base unit, AZL5, actuators, and PLL52 (if equipped). This transformer should also be mounted in an enclosure that shields the transformer from dirt and water. At least one transformer is necessary for each LMV5 base unit. Depending upon how many devices are connected to the CANbus (actuators, PLL52 module, etc.), two AGG5.210 transformers may be necessary.

**Note:** If a second transformer is used, locate it as close as possible to the actuators / PLL52 module that it powers. Do not connect 12VAC1 and 12VAC2 from each transformer together.

Figure 1-3.3 gives the dimensions of an AGG5.210 transformer. Slotted holes are provided for ease of mounting in tapped holes; a #10 machine screw and SAE washer are recommended.

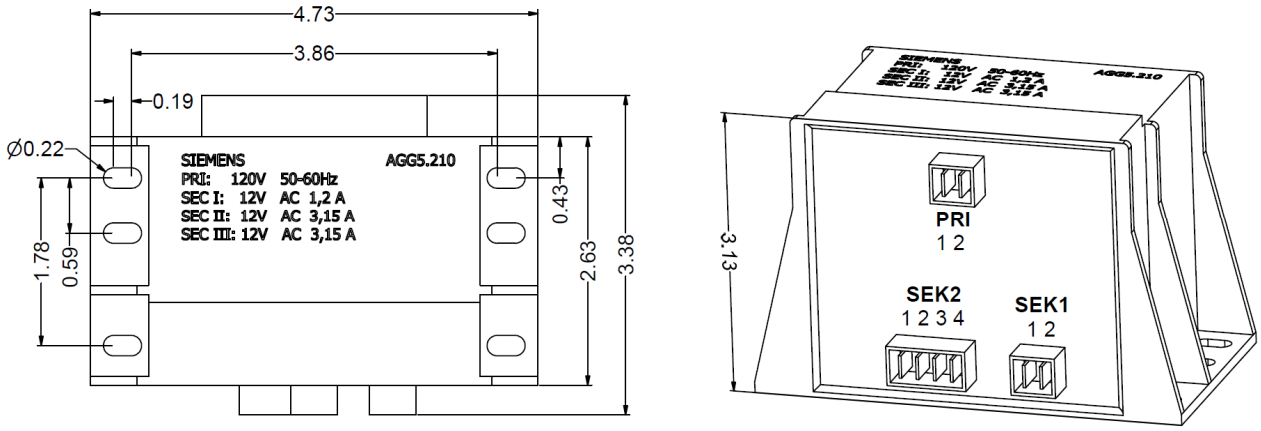


**Figure 1-3.3: AGG5.210 Dimensions (inches)**

## 1-4: Important Safety Notes

- The LMV5 is a safety device. Under no circumstances should the unit be modified or opened. SCC Inc. will not assume responsibility for damage resulting from unauthorized modification of the unit.

- After commissioning, and after each service visit, the flue gas values should be checked across the firing range.

- All activities (mounting, installation, service work, etc.) must be performed by qualified staff.

- Before performing any work in the connection area of the LMV5, disconnect the unit from the main supply (all-polar disconnection).

- Protection against electrical shock hazard on the LMV5 and all other connected electrical components must be ensured through good wiring and grounding practices.

- Fall or shock can adversely affect the safety functions of an LMV5. Such units must not be put into operation, even if they do not exhibit any apparent damage.

- The coupling that is used between the actuator and the driven valve / damper is safety related, and must be of a robust and flexible design. Should this coupling fail during operation, the LMV5 will no longer have control of the burner's combustion, bringing about a hazardous condition.

- Condensation and the entry of water into the unit must be avoided.

# 1-5: Approvals

The LMV5 and its various system components have the following standards and approvals:

CE

Conformity to EEC directives

| | |
|---|---|
| - Electromagnetic compatibility EMC (immunity) | 2004/108/EC |
| - Directive for gas-fired appliances | 2009/142/EC |
| - Low-voltage directive | 2006/95/EC |
| - Directive for pressure devices | 97/23/EEC |
| - Safety limit thermostats | EN 14597:2005 |

Safety and control devices for gas and/or oil burners and gas and/or oil appliances - Particular requirements -
Part 1: Fuel-air ratio controls, electronic type — ISO 23552-1:2007

ISO 9001: 2008
Cert. 00739

ISO 14001: 2004
Cert. 38233

| | Europe | | | | USA | | | Australia | Ships | |
|---|---|---|---|---|---|---|---|---|---|---|
| **Type** | TÜV | TÜV CERT | DIN Geprüft | DVGW | UL | CSA | FM APPROVED | | Lloyd's Register | plant in 2013 GL |
| **LMV50.320B2** | --- | --- | --- | --- | --- | --- | --- | --- | --- | --- |
| **LMV51.000C2** | ● | ● | ● | ● | --- | --- | --- | ● | ● | ● |
| **LMV51.040C1** | --- | --- | --- | --- | ● | ● | ● | ● | ● | ● |
| **LMV51.100C1** | ● | ● | ● | ● | --- | --- | --- | ● | ● | ● |
| **LMV51.100C2** | ● | ● | ● | ● | --- | --- | --- | ● | ● | ● |
| **LMV51.140C1** | --- | --- | --- | --- | ● | ● | ● | ● | ● | ● |
| **LMV51.300B1** | ● | ● | ● | ● | --- | --- | --- | ● | ● | ● |
| **LMV51.300B2** | ● | ● | ● | ● | --- | --- | --- | ● | ● | ● |
| **LMV51.340B1** | --- | --- | --- | --- | ● | ● | ● | ● | ● | ● |
| **LMV52.200B1** | ● | ● | ● | ● | --- | --- | --- | ● | ● | ● |
| **LMV52.200B2** | ● | ● | ● | ● | --- | --- | --- | ● | ● | ● |
| **LMV52.240B1** | --- | --- | --- | --- | ● | ● | ● | ● | ● | ● |
| **LMV52.240B2** | --- | --- | --- | --- | --- | --- | --- | ● | ● | ● |
| **LMV52.400B2** | ● | ● | ● | ● | --- | --- | --- | ● | ● | ● |
| **LMV52.440B1** | --- | --- | --- | --- | ● | ● | ● | ● | ● | ● |
| | | | | | | | | | | |
| **LMV5... system components:** | | | | | | | | | | |
| **AZL52…** | ● | ● | ● | ● | ● | ● | ● | --- | ● | ● |
| **SQM45.../48...** | ● | ● | ● | ● | ● | ● | ● | ● | ● | ● |
| **SQM9…** | ● | ● | ● | ● | ● | ● | ● | --- | --- | --- |
| **QRI2…** | ● | ● | ● | ● | ● | ● | ● | ● | ● | ● |
| **QRA7…** | ● | ● | ● | ● | ● | ● | ● | --- | ● | ● |
| **PLL52…** | ● | ● | ● | ● | ● | ● | ● | ● | --- | --- |
| **QGO20…** | ● | ● | ● | ● | ● | ● | ● | --- | --- | --- |

Intentionally Left Blank

Section 1 Overview

**Section 2 Wiring**

Section 3 Parameters

Section 4 Commissioning

Section 5 VSD

Section 6 $O_2$ Trim

Section 7 Troubleshooting

Section 8 Modbus

Section 9 ACS450

Section 10 Revision History

Appendix A Application Guide

Appendix B* Complimentary Products Guide

*Can be found at www.scccombustion.com.

HOME

Section 1 Overview

**Section 2 Wiring**

Section 3 Parameters

Section 4 Commissioning

Section 5 VSD

Section 6 $O_2$ Trim

Section 7 Troubleshooting

Section 8 Modbus

Section 9 ACS450

Section 10 Revision History

Appendix A Application Guide

Appendix B* Complimentary Products Guide

*Can be found at www.scccombustion.com.

HOME

# 2-1: Wiring Introduction

The LMV5 is a very flexible burner control. As such, there are many different ways to wire it. The specific application will dictate the wiring required. This section details the most common applications.

The parameter settings outlined in Section 3 can enable, disable or change the functionality of many terminals on the LMV5. Thus, wiring and parameter settings work together to make the LMV5 an extremely versatile BMS.

This section includes terminal descriptions (Section 2-2) and extensive wiring diagrams (Section 2-3) that detail the many applications of the LMV5.

**Terminals**

The connection terminals of the LMV5 are RAST 5 and RAST 3.5 connectors (plugs). Line voltage plugs are keyed so that they will only fit into one socket of the LMV5, eliminating the possibility of inserting a plug into an incorrect socket.

Each plug is designed to connect one external device or a small group of external devices, such as gas valves, to the LMV5. Each group of plugs on the front of the LMV5 provides line voltage and grounds so that an additional terminal strip is not necessary.

**Note:** All protective earth grounds (PE), neutrals (N) and lines (L) are common inside the LMV5.

| X9- | 01. | 04 |
|---|---|---|
| Plug Group | Plug Number in Group | Pin Number on Plug |

**Figure 2-1.1: Numbering Scheme on *Line Voltage* (RAST 5) Terminals of the LMV5**

**Note:** Dashes or dots can be used interchangeably between the numbers shown above.

| X62. | 2 |
|---|---|
| Plug Number | Pin Number |

**Figure 2-1.2: Numbering Scheme on *Low Voltage* (RAST 3.5) Terminals of the LMV5**

Terminal descriptions (Section 2-2) provide a map outlining exactly where the line and low voltage plugs are located.

For each plug, Pin 1 is marked on the casing of the LMV5 as well as on the PLL52 module.

**Grounds**

The LMV5 has three different types of grounds:

- Protective Earth (marked as **PE** on the LMV5)
- Functional Earth (marked as **FE** on the LMV5)
- Reference Ground (marked as **0**, **M** or **GND** on the LMV5, hereafter referred to as **0**)

**Protective Earth**

Protective Earth (PE) or chassis ground must always be connected to the control panel grounding lug. The purpose of PE is to provide a ground for all 120 VAC connections. One wire from the secondary side of the control panel's main step-down transformer should also be connected to the control panel grounding lug, as well as a PE on LMV5 transformer terminal SEK2.

All of the PE terminals on the front of the LMV5 casing are common.

**Functional Earth**

Functional Earth (FE) connections are found on the CANbus terminals as well as other low voltage connections. The sole purpose of the FE is for termination of low voltage cable shields.

The FE is bonded to the Reference Ground through capacitors on the LMV5 circuit board with the exception of the CANbus where it is bonded directly.

**Reference Ground**

The last type of ground is the Reference Ground (0). These are found on the low voltage connections. The purpose of the Reference Ground is to serve as a datum to measure other voltages.

The Reference Ground is bonded to the FE on the CANbus circuit board through SEK2 pins 2 and 3 on the AGG5.210 transformer.

**Note:** AGG5.210 transformer SEK2, pins 2 and 3, are also connected to the control panel grounding lug (PE), so that all three grounds are eventually bonded together.

**Summary:**

- 0 & PE are bonded together at the transformer (connect SEK2 pin 3 to panel ground).
- For the CANbus only, FE is bonded to 0 & PE directly on the circuit board.
- Everywhere else, FE is bonded to 0 & PE through a capacitor on the circuit board.

**CANbus**

The CANbus is a data bus similar to a computer network. The CANbus is used to connect the actuators, AZL5, and PLL52 module to the LMV5 base unit. Special shielded cable is used to connect all devices on the CANbus to the LMV5 base unit. This cable carries five wires and a braided shield that is located underneath the plastic cable sheathing.

The two heavier gauge wires (16 AWG) are used for power transmission to the connected devices. These power wires are labeled 12VAC1 and 12VAC2, and carry 12 VAC each. These wires are powered by SEK2 Pin 1 and Pin 4 of the AGG5.210 transformer's 4-pin plug, and are fused by FU2 and FU3. These fuses are located under black covers on the right hand side of the LMV5. If measured, 12VAC1 and 12VAC2 should have a potential of approximately 12 VAC to reference ground and 24 VAC between 12VAC1 and 12VAC2.

The two lighter gauge (24 AWG) wires are a shielded, twisted pair to help reduce noise on the line. They carry the digital CANbus data signals and are labeled CANL and CANH. The signal on these wires consists of 5 VDC pulses.

**Note:** These data wires should never contact the 12VAC wires when the system is powered. LMV5 damage may result.

The termination jumper located on each actuator and PLL52 module is used to terminate CANH and CANL and should be moved to the bus termination position on the last CANbus device.

The last wire in the cable is the reference ground and is marked GND. This is also connected to each device on the CANbus so that the LMV5 can monitor for voltage drops that might affect actuator operation.

**Note:** It is extremely important that the shield of the CANbus cable is properly terminated.

The shield of the CANbus cable is terminated to the LMV5 by using a special strain relief (part number AGG5.110). This strain relief also has a wire that should be connected to the shield terminal on the LMV5, terminals X50 and X51. The installation of this clip is shown in Figure 2-1.3.

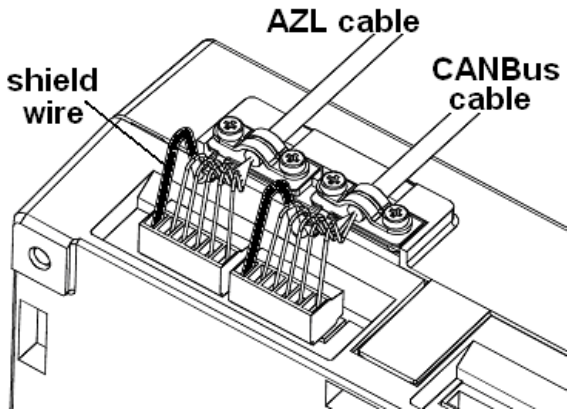


**Figure 2-1.3: Installation of CANbus Strain Relief**

**CANbus (continued)**

The shield of the CANbus cable must be connected on each cable segment (between the LMV5 and the actuators or PLL52 module) so that the entire shield has continuity with terminal X51.1 which is the shield connection on the LMV5. This is achieved by clamping the shield on both cable segments with the metal clamps provided on the cable entry of each actuator. Clamps for the CANbus shield are also provided on the PLL52 module.

The current provided by one AGG5.210 transformer is usually sufficient to meet the demands of the LMV5 base unit, AZL5 and actuators on a typical burner / boiler without a PLL52 module. However, situations occur when one AGG5.210 transformer is not sufficient, and a second transformer must be used. The figure below outlines the number of transformers that should be used for different situations.

<table>
<tr><td colspan="2" rowspan="2">Number and type of actuators wired on the CANbus moving concurrently.</td><td colspan="2">Permissible total CANbus cable length including AZL5 (feet).<br>Single Transformer</td></tr>
<tr><td>Actuators at 100% rated torque.</td><td>Actuators at 80% rated torque.</td></tr>
<tr><td>2 SQM45</td><td rowspan="4">0 SQM48</td><td>115</td><td>125</td></tr>
<tr><td>3 SQM45</td><td>85</td><td>95</td></tr>
<tr><td>4 SQM45</td><td>70</td><td>80</td></tr>
<tr><td>5 SQM45</td><td>2nd Transformer Req.</td><td>2nd Transformer Req.</td></tr>
<tr><td>1 SQM45</td><td rowspan="3">1 SQM48</td><td>85</td><td>95</td></tr>
<tr><td>2 SQM45</td><td>70</td><td>80</td></tr>
<tr><td>3 SQM45</td><td rowspan="2">2nd Transformer Req.</td><td>30</td></tr>
<tr><td>4 SQM45</td><td>2nd Transformer Req.</td></tr>
<tr><td>1 SQM45</td><td rowspan="3">2 SQM48</td><td rowspan="3">2nd Transformer Req.</td><td>30</td></tr>
<tr><td>2 SQM45</td><td rowspan="2">2nd Transformer Req.</td></tr>
<tr><td>3 SQM45</td></tr>
<tr><td>1 SQM45</td><td rowspan="2">3 SQM48</td><td rowspan="2">2nd Transformer Req.</td><td rowspan="2">2nd Transformer Req.</td></tr>
<tr><td>2 SQM45</td></tr>
<tr><td>1 SQM45</td><td>4 SQM48</td><td>2nd & 3rd Transformer Req.</td><td>2nd Transformer Req.</td></tr>
<tr><td rowspan="4">0 SQM45</td><td>2 SQM48</td><td>58</td><td>70</td></tr>
<tr><td>3 SQM48</td><td rowspan="2">2nd Transformer Req.</td><td rowspan="2">2nd Transformer Req.</td></tr>
<tr><td>4 SQM48</td></tr>
<tr><td>5 SQM48</td><td>2nd & 3rd Transformer Req.</td><td>2nd & 3rd Transformer Req.</td></tr>
</table>

**Figure 2-1.4: CANbus Loading**

**Notes:**

- When two transformers are used, the loading should be divided between the two transformers as equally as possible.
- The second transformer should be placed as close as possible to the actuators / PLL52 module that it powers due to voltage drop considerations.
- When adding a PLL52 module, subtract 20 ft from the cable length on the chart.
- Absolute maximum cable length is 300 ft (CANbus communication limitation).
- Never connect the 12VAC1 / 12VAC2 from one transformer to 12VAC1 / 12VAC2 on any other transformer.

**Load Controller**

The LMV51.1 and all LMV52 are equipped with a load controller. The load controller is very flexible and can read multiple sensors simultaneously. Typically, either a temperature sensor or pressure sensor is connected for burner modulation. Both a pressure and a temperature sensor can be used in conjunction for certain applications such as cold start (thermal shock protection).

The load controller has six different operational modes that can be changed by opening or closing a connection on X62. These six different modes of operation are outlined in Section 4. By using a dry contact, or switch, between terminals X62.1 and X62.2, the mode and / or setpoint of the internal load controller can be changed.

If the load controller is in "IntLC" (internal load controller), setpoint W1 will be used if X62.1 / X62.2 is open and setpoint W2 will be used if X62.1 / X62.2 is closed. If the load controller is in any other mode and X62.1 / X62.2 is closed, the LMV5 will revert back to "IntLC" and will use setpoint W1. See Section 4 for more information about load controller modes.

This feature is commonly used when switching the LMV5 from "ExtLC X62" (remote modulation via a 4-20mA source wired into terminals X62.3 and X62.4) back to "IntLC" (local, using LMV5 load controller for modulation of the burner).

The load controller also provides power for 4-20 mA or 0-10 VDC sensors, or 4-20 mA or 0-10 VDC externally powered sensors. The wiring of these sensors is covered in Section 2-3.

**Floating / Bumping and Multistage Oil**

Terminals X5-03.2 and X5-03.3 can be used for floating / bumping control or multistage oil control, also called 3-position control. This option can be done on all models of LMV5, and is required on the LMV51.0 models.

Through the use of floating / bumping, the LMV5 can be driven to a higher firing rate by placing line voltage on terminal X5-03.3 and to a lower firing rate by removing line voltage from X5-03.3 and placing line voltage on X5-03.2. No voltage on X5-03.2 or X5-03.3 keeps the current firing rate. By alternating voltage on these terminals, the firing rate of the LMV5 can be increased, decreased, or kept the same. The floating / bumping type of modulation is typically done with an RWF40/50/55.

A relay can be placed in the line connected to X5-03.2 if a low fire hold is desired.

If externally controlled multistage oil is selected, terminal X5-03.1 is energized for stage 1. Terminal X5-03.2 can be energized to put the burner in stage 2, and terminal X5-03.3 can be energized to put the burner in stage 3. De-energizing these terminals takes the burner out of stage 2 or 3.

# 2-2: Terminal Descriptions

**Top**

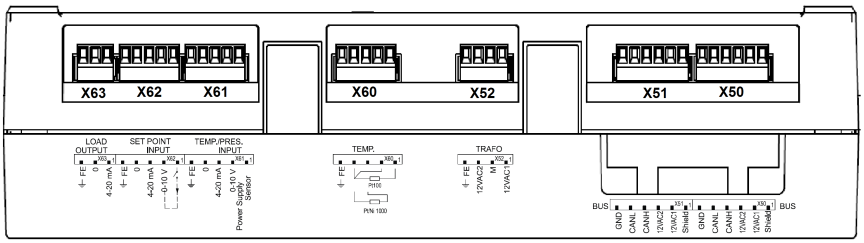


**Front**

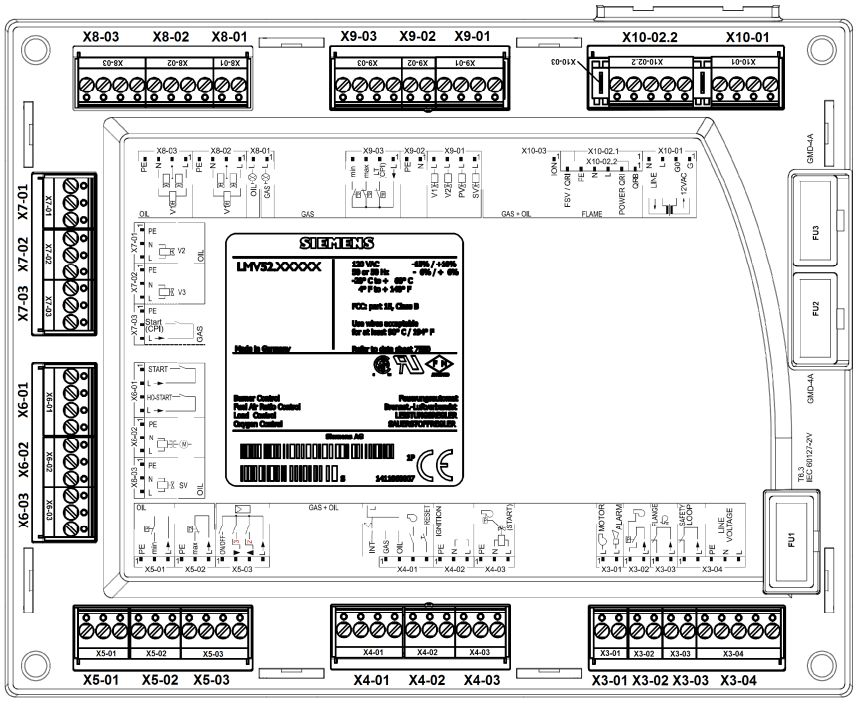


**Bottom**

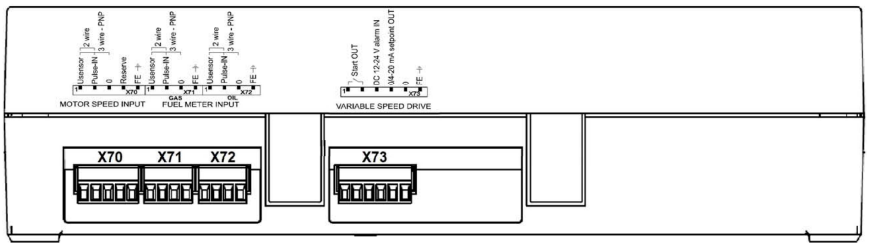


**General notes:**

1. Total combined load of all 120VAC outputs cannot exceed 5 Amps.
2. All “Line, fused” terminals are internally connected.
3. All “Neutral” terminals are internally connected.
4. All “PE” terminals are internally connected.
5. All “0” terminals are internally connected.

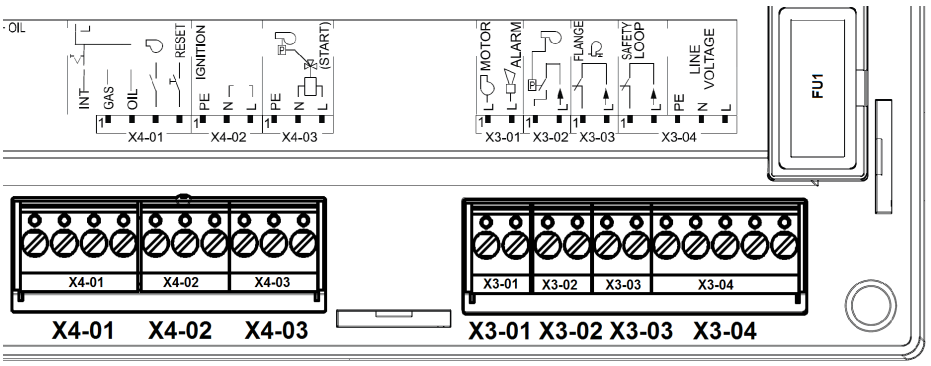


| Terminal | Type | Function | *Parameter* | Rating |
|---|---|---|---|---|
| **X3-01.1** | Programmable Output | Blower motor starter | ***ContinuousPurge PostpurgeLockout*** | 1A, 120VAC |
| **X3-01.2** | | Alarm horn | ***Alarm act/deact AlarmDelay AlarmStartPrev*** | |
| **X3-02.1** | Programmable Input | Blower air pressure switch | ***AirPressureTest FanRunupTme*** | 1.5mA, 120VAC |
| **X3-02.2** | Line | Line, fused | Not configurable | 500mA, 120VAC |
| **X3-03.1** | Fixed | Burner flange limit switch | Not configurable | 5A, 120VAC |
| **X3-03.2** | Jumper | Burner flange limit switch power | | |
| **X3-04.1** | Programmable Input | Safety loop | ***Standby Error*** | 5A, 120VAC |
| **X3-04.2** | Line | Safety loop power | Not configurable | |
| **X3-04.3** | PE | Incoming power - Protective Earth | | N/A |
| **X3-04.4** | Neutral | Incoming power - Neutral | | |
| **X3-04.5** | Line | Incoming power - Line | ***MainsFrequency*** | 6.3A, 120VAC |
| **X4-01.1** | Fixed Input | Fuel 'hardware' select gas | If no power: AZL / Modbus can 'software' select a fuel | 1.5mA, 120VAC |
| **X4-01.2** | | Fuel 'hardware' select oil | | |
| **X4-01.3** | Programmable Input | Blower motor starter aux. contact -or- FGR pressure switch | ***FGR-PS/FCC*** | |
| **X4-01.4** | Fixed Input | Remote reset and manual lockout | If in alarm: power to reset If no alarm: power to lockout | |
| **X4-02.1** | PE | Protective Earth ground | Not configurable | N/A |
| **X4-02.2** | Neutral | Neutral | | |
| **X4-02.3** | Programmable Output | Ignition Transformer | ***PreIgnitionTGas/Oil*** | 1.6A, 120VAC |
| **X4-03.1** | PE | Protective Earth ground | Not configurable | N/A |
| **X4-03.2** | Neutral | Neutral | | |
| **X4-03.3** | Programmable Output | Start signal -or- Air pressure switch test | ***ContinuousPurge NormDirectStart Start/PS-Valve*** | 0.5A, 120VAC |

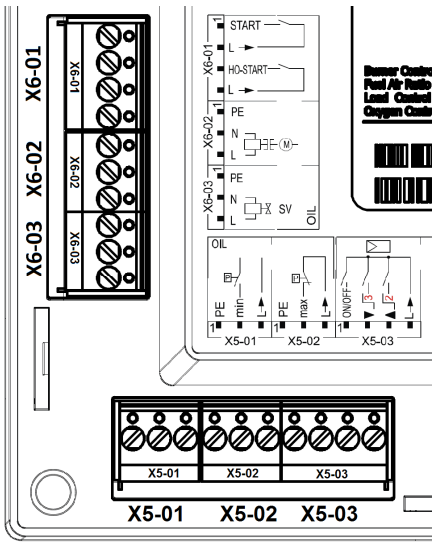


| Terminal | Type | Function | *Parameter* | Rating |
|---|---|---|---|---|
| **X5-01.1** | PE | Protective Earth ground | Not configurable | N/A |
| **X5-01.2** | Programmable Input | Low oil pressure switch | ***OilPressureMin*** | 1.5mA, 120VAC |
| **X5-01.3** | Line | Line, fused | Not configurable | 500mA, 120VAC |
| **X5-02.1** | PE | Protective Earth ground | Not configurable | N/A |
| **X5-02.2** | Programmable Input | High oil pressure switch | ***OilPressureMax*** | 1.5mA, 120VAC |
| **X5-02.3** | Line | Line, fused | Not configurable | 500mA, 120VAC |
| **X5-03.1** | Programmable Input | Burner enable (IntLC...) -or- Burner on / off (ExtLC...) | ***InputController LC_OptgMode*** | 1.5mA, 120VAC |
| **X5-03.2** | | MANY options | ***Config X5-03 LC_OptgMode Operation Mode*** | |
| **X5-03.3** | | MANY options | | |
| **X5-03.4** | Line | Line, fused | Not configurable | 500mA, 120VAC |
| **X6-01.1** | Programmable Input | Atomizing media pressure switch | ***StartReleaseOil*** | 1.5mA, 120VAC |
| **X6-01.2** | Line | Line, fused | Not configurable | 500mA, 120VAC |
| **X6-01.3** | Programmable Input | Heavy oil stage release | ***HeavyOilDirectStart*** | 1.5mA, 120VAC |
| **X6-01.4** | Line | Line, fused | Not configurable | 500mA, 120VAC |
| **X6-02.1** | PE | Protective Earth ground | Not configurable | N/A |
| **X6-02.2** | Neutral | Neutral | | |
| **X6-02.3** | Programmable Output | Oil pump motor starter | ***OilPumpCoupling IgnOilPumpStart*** | 1.6A, 120VAC |
| **X6-03.1** | PE | Protective Earth ground | Not configurable | N/A |
| **X6-03.2** | Neutral | Neutral | | |
| **X6-03.3** | Fixed Output | Outside main oil safety valve (SV) | Typ: Atom. air compressor | 1.6A, 120VAC |

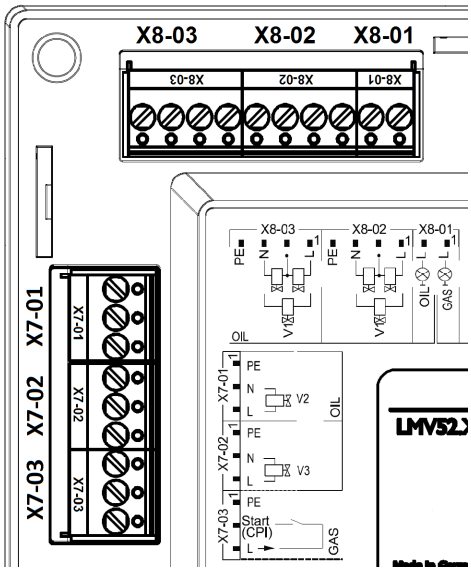


| Terminal | Type | Function | *Parameter* | Rating |
|---|---|---|---|---|
| **X7-01.1** | PE | Protective Earth ground | Not configurable | N/A |
| **X7-01.2** | Neutral | Neutral | | |
| **X7-01.3** | Programmable Output | Main oil valve V2 (Stage 2) | ***Operation Mode*** | 1.6A, 120VAC |
| **X7-02.1** | PE | Protective Earth ground | Not configurable | N/A |
| **X7-02.2** | Neutral | Neutral | | |
| **X7-02.3** | Programmable Output | Main oil valve V3 (Stage 3) | ***Operation Mode*** | 1.6A, 120VAC |
| **X7-03.1** | PE | Protective Earth ground | Not configurable | N/A |
| **X7-03.2** | Programmable Input | Start release on gas -or- Proof of closure (POC) | ***StartReleaseGas*** | 1.6A, 120VAC |
| **X7-03.3** | Line | Line, fused | Not configurable | 500mA, 120VAC |
| **X8-01.1** | Fixed Output | Firing gas indication light | Not configurable | 1A, 120VAC |
| **X8-01.2** | | Firing oil indication light | | |
| **X8-02.1** | Programmable Output | Main oil valve V1 (Stage 1) | ***Operation Mode*** | 1.6A, 120VAC |
| **X8-02.2** | Tie Point | Use as a tiepoint (EU use only) | Not configurable | N/A |
| **X8-02.3** | Neutral | Neutral | | |
| **X8-02.4** | PE | Protective Earth ground | | |
| **X8-03.1** | Programmable Output | Main oil valve V1 (Stage 1) | ***Operation Mode*** | 1.6A, 120VAC |
| **X8-03.2** | Tie Point | Use as a tiepoint (EU use only) | Not configurable | N/A |
| **X8-03.3** | Neutral | Neutral | | |
| **X8-03.4** | PE | Protective Earth ground | | |

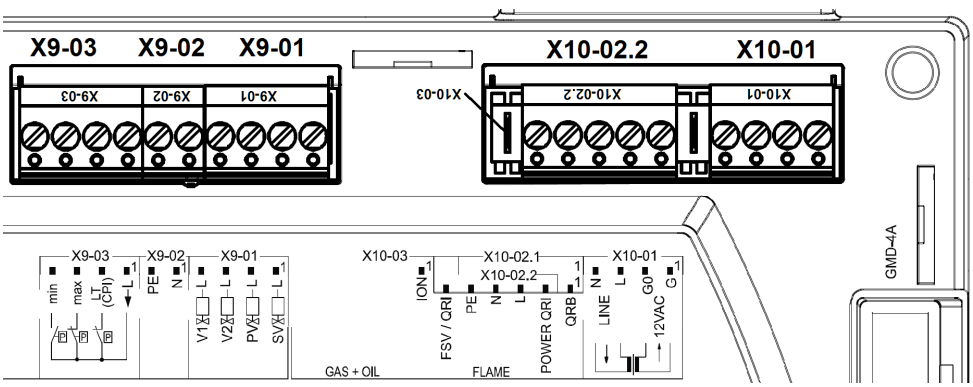


| Terminal | Type | Function | *Parameter* | Rating |
|---|---|---|---|---|
| **X9-01.1** | Fixed Output | Outside main gas safety valve (SV) | Typ: Gas booster | 1.6A, 120VAC |
| **X9-01.2** | Programmable Output | Gas pilot valve | ***ContPilotGas/Oil*** ***Interval1Gas/Oil*** ***SafetyTme1Gas/Oil*** | |
| **X9-01.3** | | Main gas valve V2 (downstream) | ***Interval2Gas/Oil*** ***SafetyTme2Gas/Oil*** ***ValveProvingType*** | |
| **X9-01.4** | | Main gas valve V1 (upstream) | | |
| **X9-02.1** | Neutral | Neutral | Not configurable | N/A |
| **X9-02.2** | PE | Protective Earth ground | | |
| **X9-03.1** | Line | Line, fused | Not configurable | 500mA, 120VAC |
| **X9-03.2** | Programmable Input | Proof of closure (POC) -or- Valve proving pressure switch | ***Config_PS-VP/CPI*** | 1.5mA, 120VAC |
| **X9-03.3** | | High gas pressure switch | ***GasPressureMax*** | |
| **X9-03.4** | | Low gas pressure switch | ***GasPressureMin*** | |
| **X10-01.1** | Power | 12VAC power - connect to SEK1 pin 2 | Not configurable | 1.2A, 12VAC |
| **X10-01.2** | | 12VAC power - connect to SEK1 pin 1 | | |
| **X10-01.3** | Line | Line, fused - connect to PRI pin 2 | | 1A, 120VAC |
| **X10-01.4** | Neutral | Neutral - connect to PRI pin 1 | | N/A |
| **X10-02.1** | Programmable Input | QRB signal (EU only - no plug) | ***ExtranLightTest*** ***ReacExtranLight*** ***ReacTmeLossFlame*** ***StandardFactor*** ***Standardize*** | 8VDC |
| **X10-02.2** | Fixed Output | QRI power supply | Not configurable | 100mA, 14-21VDC |
| **X10-02.3** | Line | Line, fused | | 500mA, 120VAC |
| **X10-02.4** | Neutral | Neutral | | N/A |
| **X10-02.5** | PE | Protective Earth ground | | |
| **X10-02.6** | Programmable Input | QRI signal voltage (IR) | See X10-02.1 above | 5VDC nominal |
| **X10-03.1** | Programmable Input | Ionization probe signal (flame rod) | See X10-02.1 above | 0.5mA |

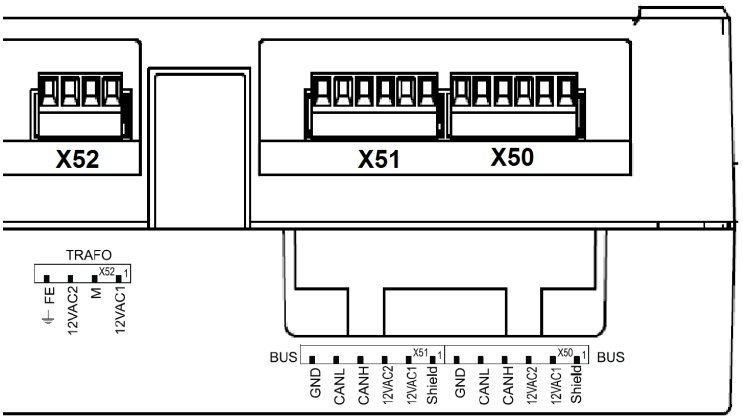


| Terminal | Type | Function | *Parameter* | Rating |
|---|---|---|---|---|
| **X50.1** | CANbus (AZL) | Shield (FE) | Not configurable | N/A |
| **X50.2** | | 12VAC1 power | | 4A, 12VAC |
| **X50.3** | | 12VAC2 power | | |
| **X50.4** | | CANH communication signal | | 5VDC |
| **X50.5** | | CANL communication signal | | |
| **X50.6** | | Reference ground | | N/A |
| **X51.1** | CANbus (Actuators, PLL) | Shield (FE) | Not configurable | N/A |
| **X51.2** | | 12VAC1 power | | 4A, 12VAC |
| **X51.3** | | 12VAC2 power | | |
| **X51.4** | | CANH communication signal | | 5VDC |
| **X51.5** | | CANL communication signal | | |
| **X51.6** | | Reference ground | | N/A |
| **X52.1** | Transformer | 12VAC1 from SEK2 pin 1 | Not configurable | 3.15A, 12VAC |
| **X52.2** | | Reference ground from SEK2 pin 2 | | N/A |
| **X52.3** | | 12VAC2 from SEK2 pin 4 | | 3.15A, 12VAC |
| **X52.4** | | Functional ground from SEK2 pin 3 | | N/A |

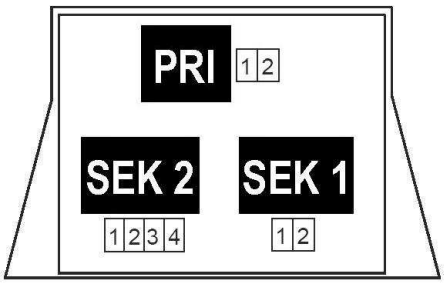

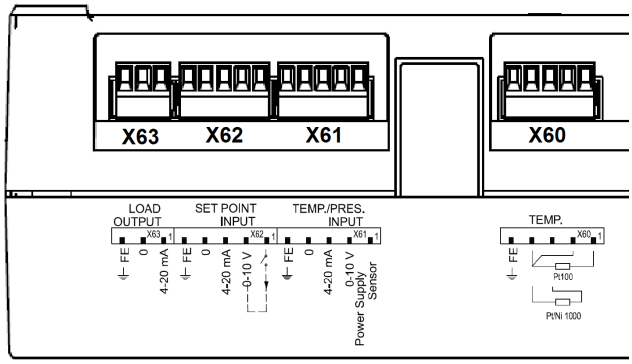


| Terminal | Type | Function | *Parameter* | Rating |
|---|---|---|---|---|
| **X60.1** | Programmable Input | Pt100 3-wire RTD temperature signal (Input 1) | ***AdditionalSens<br>AirTempX60PT1000<br>FGR-sensor<br>MeasureRangePtNi<br>Sensor Select<br>var. RangePtNi*** | N/A |
| **X60.2** | | Pt100 3-wire RTD line compensation | | |
| **X60.3** | | Pt1000 / Ni1000 2-wire RTD temperature signal (Input 4) | | |
| **X60.4** | 0 | Reference ground | | |
| **X60.5** | FE | Functional ground for shield | | |
| **X61.1** | Power | Pressure / temperature transducer power supply | ***Ext Inp X61 U/I<br>MRange PressSens<br>MRange TempSens<br>Sensor Select*** | 25mA, 20VDC |
| **X61.2** | Programmable Input | 0-10VDC (Input 2) | | 0-10.5VDC |
| **X61.3** | | 4-20mA (Input 2) | | 0-21mA/3-21mA |
| **X61.4** | 0 | Reference ground | | N/A |
| **X61.5** | FE | Functional ground for shield | | |
| **X62.1** | Power | Remote setpoint / remote modulation power supply | ***Ext Inp X62 U/I<br>Ext MaxSetpoint<br>Ext MinSetpoint<br>LC_OptgMode<br>User MaxLoadMod/Stg*** | 2mA, 32VDC |
| **X62.2** | Programmable Input | 0-10VDC (Input 3) | | 0-10.5VDC |
| **X62.3** | | 4-20mA (Input 3) | | 0-21mA/3-21mA |
| **X62.4** | 0 | Reference ground | | N/A |
| **X62.5** | FE | Functional ground for shield | | |
| **X63.1** | Programmable Output | MANY options | ***CurrMode 0/4mA<br>OutValuSelection<br>Scale 0/4mA<br>Scale20mA angle<br>Scale20mA perc<br>Scale20mA press<br>Scale20mA temp*** | 0/4-20mA |
| **X63.2** | 0 | Reference ground | | N/A |
| **X63.3** | FE | Functional ground for shield | | |

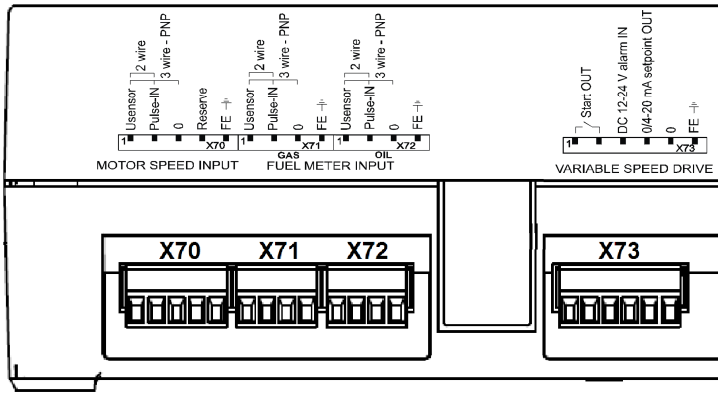


| Terminal | Type | Function | *Parameter* | Rating |
|---|---|---|---|---|
| **X70.1** | Fixed Output | Speed sensor power supply (BRN) | ***Absolute Speed Num Puls per R Standardization StandardizedSp Setteling Time*** | 45mA, 10VDC |
| **X70.2** | Programmable Input | Speed sensor pulse, low 0-1.5VDC, high 3-10VDC (BLK) | | 0-10VDC |
| **X70.3** | 0 | Reference ground (BLU) | | N/A |
| **X70.4** | Spare | Spare terminal | | |
| **X70.5** | FE | Functional ground for shield | | |
| **X71.1** | Fixed Output | Gas meter pulse power supply | ***PulseValueGas*** | 45mA, 10VDC |
| **X71.2** | Programmable Input | Gas meter pulse, low 0-1.5VDC, high 3-10VDC | | 0-10VDC |
| **X71.3** | 0 | Reference ground | | N/A |
| **X71.4** | FE | Functional ground for shield | | |
| **X72.1** | Fixed Output | Oil meter pulse power supply | ***PulseValueOil*** | 45mA, 10VDC |
| **X72.2** | Programmable Input | Oil meter pulse, low 0-1.5VDC, high 3-10VDC | | 0-10VDC |
| **X72.3** | 0 | Reference ground | | N/A |
| **X72.4** | FE | Functional ground for shield | | |
| **X73.1** | Programmable Output | VSD dry contact | ***ContinuousPurge FGR-PS/FCC ReleasecontctVSD TolQuickShutdown*** | 2A, 24VAC/DC |
| **X73.2** | | | | |
| **X73.3** | Fixed Input | VSD alarm | | 24VDC |
| **X73.4** | Programmable Output | 0/4-20mA | | 0-20mA,750ohms |
| **X73.5** | 0 | Reference ground | | N/A |
| **X73.6** | FE | Functional ground for shield | | |

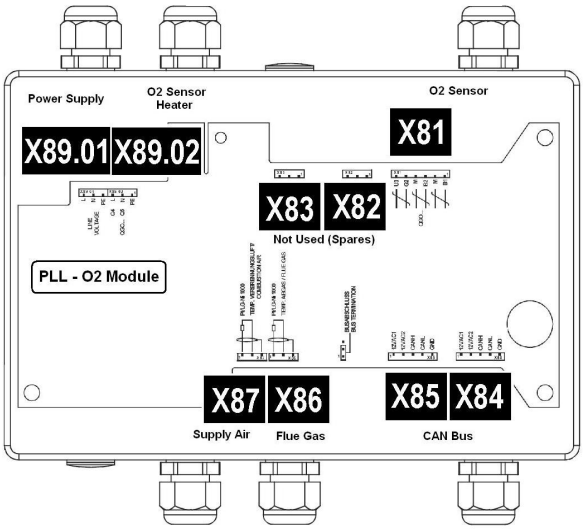


| Terminal | Type | Function | *Parameter* | Rating |
|---|---|---|---|---|
| **X81.1** | Fixed Input | $O_2$ signal, Nernst voltage - connect to QGO (B1) | Not configurable | 100mVDC |
| **X81.2** | 0 | Ground - connect to QGO (M) | | N/A |
| **X81.3** | Fixed Input | Thermocouple - connect to QGO (B2) | | 0 - 33mVDC |
| **X81.4** | 0 | Ground - connect to QGO (M) | | N/A |
| **X81.5** | Fixed Output | Temp - connect to QGO (G2) | | 20VDC |
| **X81.6** | Fixed Input | Temp compensation - connect to QGO (U3) | | 4VDC |
| **X82** | Spare (not used) | | | |
| **X83** | Spare (not used) | | | |
| **X84.1** | CANbus (PLL) | 12VAC1 power for PLL | Not configurable | 4A, 12VAC |
| **X84.2** | | 12VAC2 power for PLL | | |
| **X84.3** | | CANH communication signal | | 5VDC |
| **X84.4** | | CANL communication signal | | |
| **X84.5** | | Reference ground | | N/A |
| **X85.1** | CANbus (PLL) | 12VAC1 power for PLL | Not configurable | 4A, 12VAC |
| **X85.2** | | 12VAC2 power for PLL | | |
| **X85.3** | | CANH communication signal | | 5VDC |
| **X85.4** | | CANL communication signal | | |
| **X85.5** | | Reference ground | | N/A |

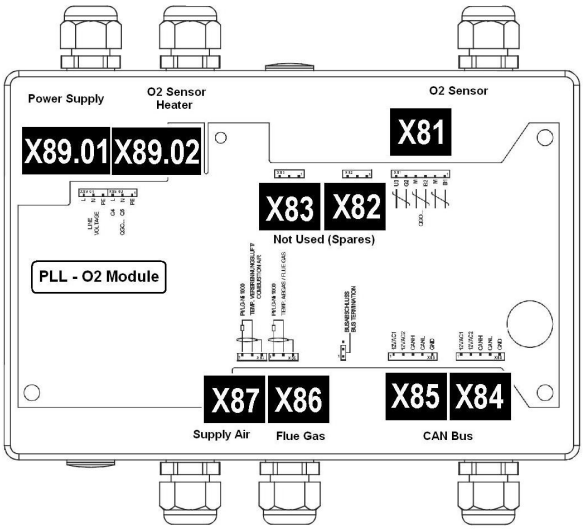


| Terminal | Type | Function | *Parameter* | Rating |
|---|---|---|---|---|
| **X86.1** | Programmable Input | Flue gas temperature sensor | ***FlueGasTemp FlueGasTempSens MaxTempFlGasGas/Oil*** | N/A |
| **X86.2** | 0 | Reference ground | | |
| **X86.3** | FE | Functional ground for shield | | |
| **X87.1** | Programmable Input | Supply air temperature sensor | ***AirTempX60PT1000 SupplyAirTemp SupAirTempSens*** | N/A |
| **X87.2** | 0 | Reference ground | | |
| **X87.3** | FE | Functional ground for shield | | |
| **X89-02.1** | Fixed Output | To QGO terminal PE - Protective Earth | Not configurable | 2.5A, 120VAC |
| **X89-02.2** | | To QGO terminal Q5 - Neutral (controls QGO heating element) | | |
| **X89-02.3** | | To QGO terminal Q4 - Line (controls QGO heating element) | | |
| **X89-01.4** | Fixed Input | Supply power to PLL - Protective Earth | Not configurable | 2.5A, 120VAC |
| **X89-01.5** | | Supply power to PLL - Neutral | | |
| **X89-01.6** | | Supply power to PLL - Line (internal 4A fuse) | | |

## 120VAC INPUT Connections

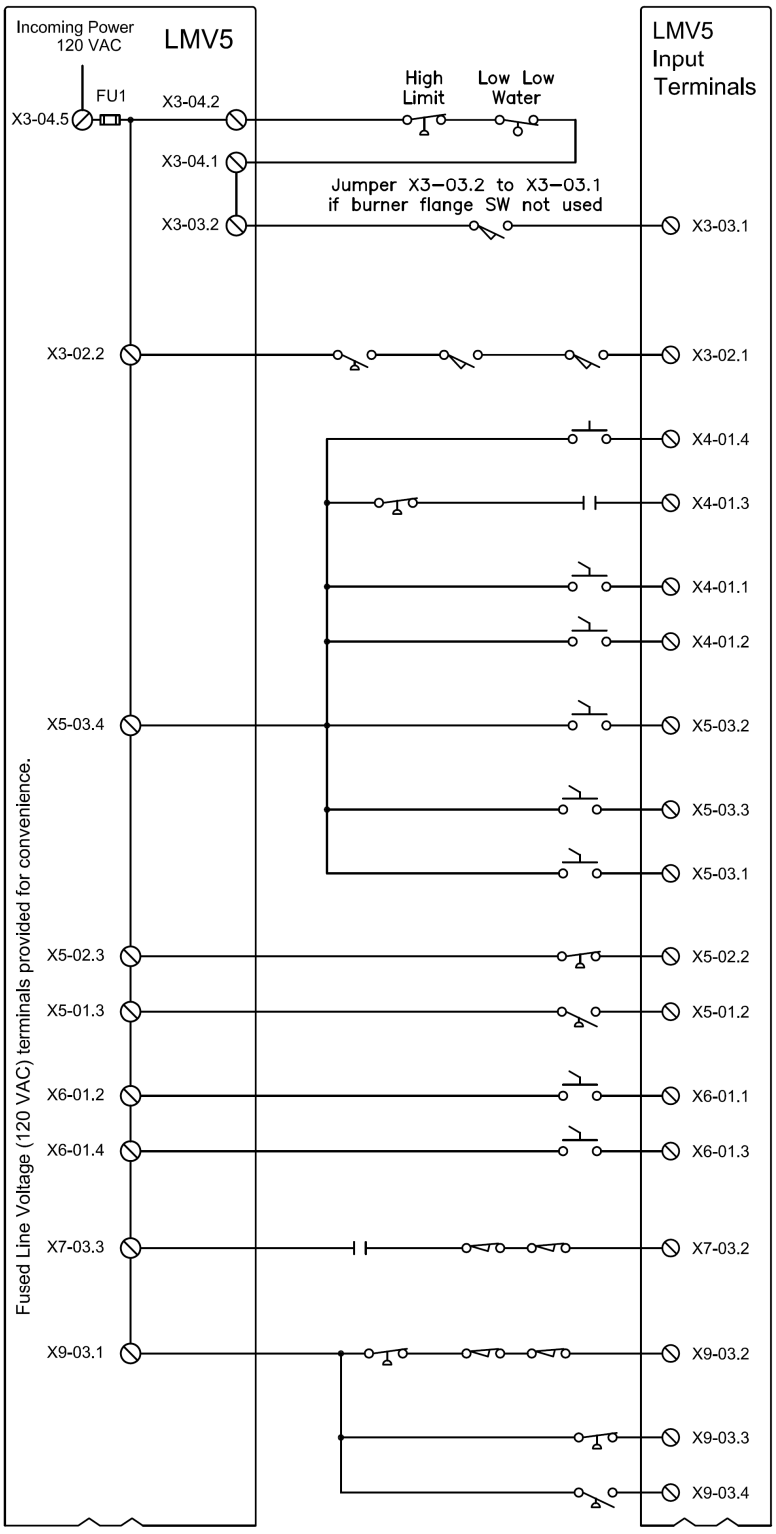


| Terminal Description | Related Parameter(s) |
|---|---|
| Safety Loop (Safety Limits) | ***Standby Error*** |
| Burner Flange (End of Safety Limit String) | ***Fixed Function Not configurable*** |
| Comb. Air Pressure and Fresh Air damper end SW and Stack Damper end SW | ***AirPressureTest FanRunupTme*** |
| Remote Reset and Lockout | ***Fixed Function Not configurable*** |
| Blower Starter Aux. (FCC) or FGR Pressure Switch or 2nd Air Pressure SW | ***FGR-PS/FCC RotSpeed PS*** |
| Fuel Select Gas | ***Fixed Function Not configurable*** |
| Fuel Select Oil | ***Fixed Function Not configurable*** |
| Decrease Firing Rate or Enable/Disable 02 Trim | ***Config X5-03 LC_OptgMode*** |
| Increase Firing Rate or Program Stop Phase 36 | ***Config X5-03 LC_OptgMode*** |
| Burner Switch (Operating Limit String) | ***InputController LC_OptgMode*** |
| High Oil Pressure SW | ***OilPressureMax*** |
| Low Oil Pressure SW | ***OilPressureMin*** |
| Atomizing Media Press SW | ***StartReleaseOil*** |
| Heavy Oil Temp SW | ***HeavyOilDirectStart*** |
| Gas and Oil POC or Gas POC or Oil POC or Start Release Gas | ***StartReleaseGas*** |
| Gas and Oil POC or Gas POC or Oil POC or Valve Proving Press SW | ***Config_PS-VP/CPI*** |
| High Gas Pressure SW | ***GasPressureMax*** |
| Low Gas Pressure SW | ***GasPressureMin*** |

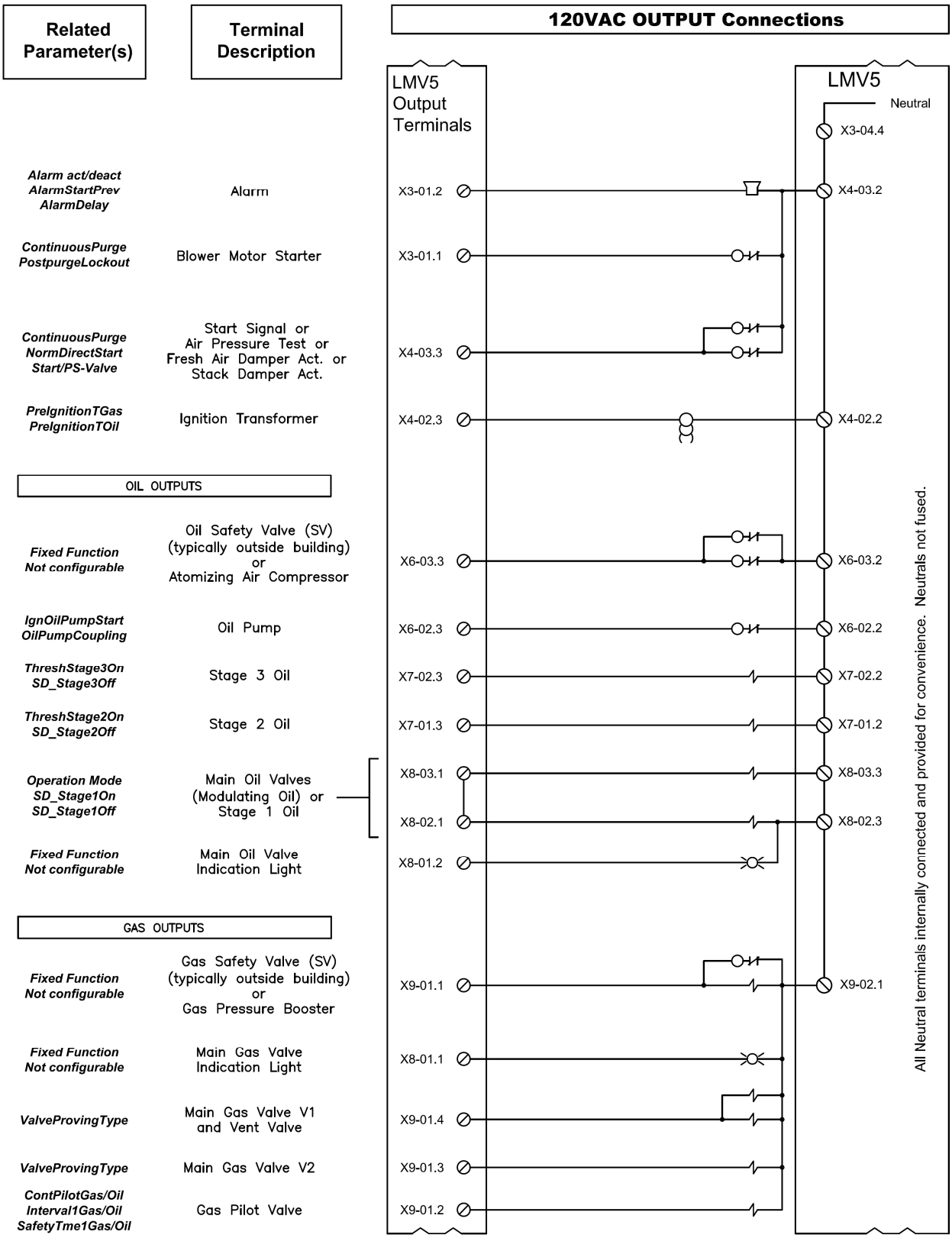
Related Parameter(s)
Terminal Description
120VAC OUTPUT Connections
LMV5 Output Terminals
LMV5
Neutral
X3-04.4
Alarm act/deact
AlarmStartPrev
AlarmDelay
Alarm
X3-01.2
X4-03.2
ContinuousPurge
PostpurgeLockout
Blower Motor Starter
X3-01.1
ContinuousPurge
NormDirectStart
Start/PS-Valve
Start Signal or
Air Pressure Test or
Fresh Air Damper Act. or
Stack Damper Act.
X4-03.3
PreIgnitionTGas
PreIgnitionTOil
Ignition Transformer
X4-02.3
X4-02.2
OIL OUTPUTS
Fixed Function
Not configurable
Oil Safety Valve (SV)
(typically outside building)
or
Atomizing Air Compressor
X6-03.3
X6-03.2
IgnOilPumpStart
OilPumpCoupling
Oil Pump
X6-02.3
X6-02.2
ThreshStage3On
SD_Stage3Off
Stage 3 Oil
X7-02.3
X7-02.2
ThreshStage2On
SD_Stage2Off
Stage 2 Oil
X7-01.3
X7-01.2
Operation Mode
SD_Stage1On
SD_Stage1Off
Main Oil Valves
(Modulating Oil) or
Stage 1 Oil
X8-03.1
X8-03.3
X8-02.1
X8-02.3
Fixed Function
Not configurable
Main Oil Valve
Indication Light
X8-01.2
GAS OUTPUTS
Fixed Function
Not configurable
Gas Safety Valve (SV)
(typically outside building)
or
Gas Pressure Booster
X9-01.1
X9-02.1
Fixed Function
Not configurable
Main Gas Valve
Indication Light
X8-01.1
ValveProvingType
Main Gas Valve V1
and Vent Valve
X9-01.4
ValveProvingType
Main Gas Valve V2
X9-01.3
ContPilotGas/Oil
Interval1Gas/Oil
SafetyTme1Gas/Oil
Gas Pilot Valve
X9-01.2
All Neutral terminals internally connected and provided for convenience. Neutrals not fused.

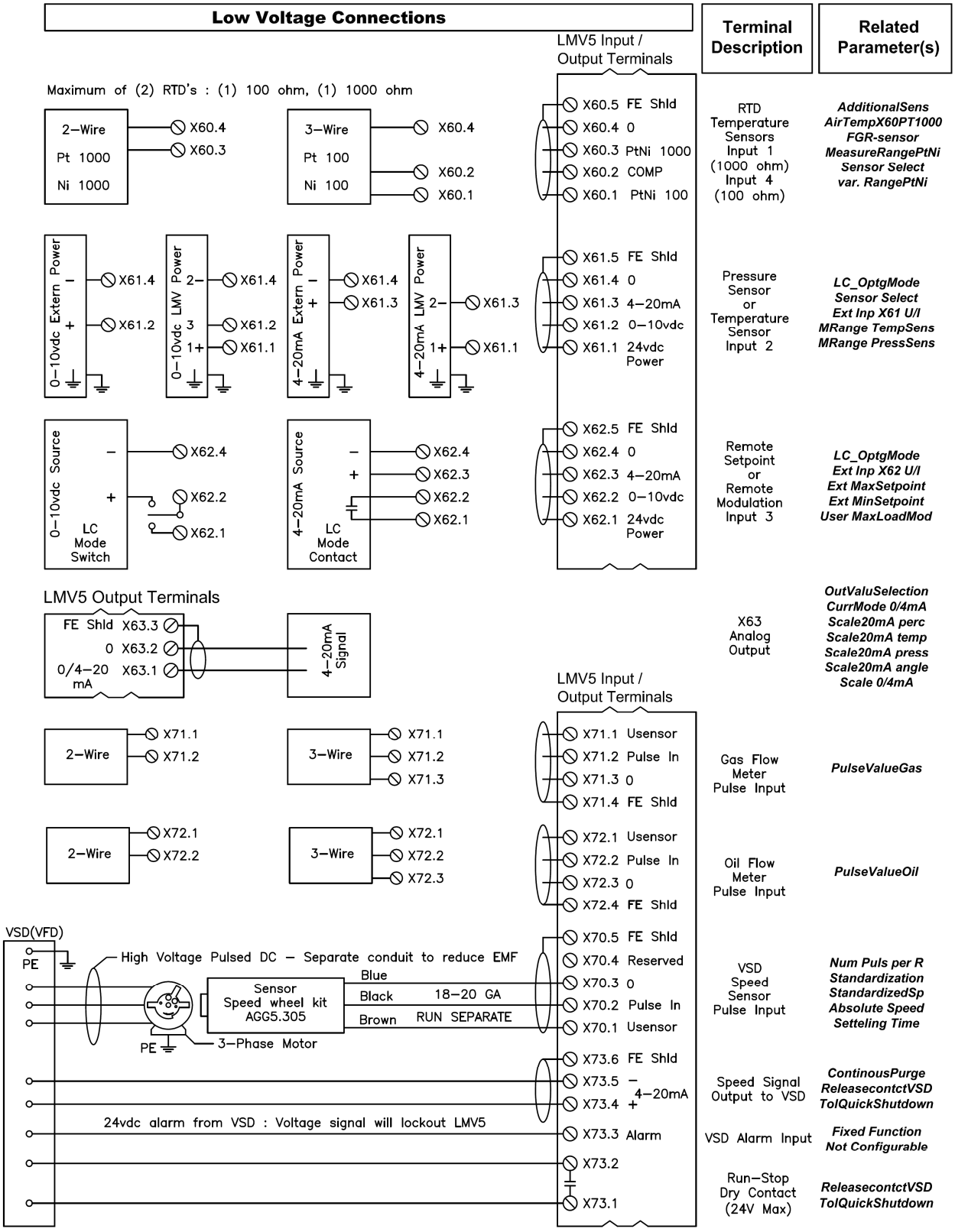
Low Voltage Connections
Terminal Description
Related Parameter(s)
LMV5 Input / Output Terminals
Maximum of (2) RTD's : (1) 100 ohm, (1) 1000 ohm
2–Wire
Pt 1000
Ni 1000
X60.4
X60.3
3–Wire
Pt 100
Ni 100
X60.4
X60.2
X60.1
X60.5 FE Shld
X60.4 0
X60.3 PtNi 1000
X60.2 COMP
X60.1 PtNi 100
RTD Temperature Sensors Input 1 (1000 ohm) Input 4 (100 ohm)
AdditionalSens
AirTempX60PT1000
FGR-sensor
MeasureRangePtNi
Sensor Select
var. RangePtNi
0–10vdc Extern Power
X61.4
X61.2
0–10vdc LMV Power
X61.4
X61.2
X61.1
4–20mA Extern Power
X61.4
X61.3
4–20mA LMV Power
X61.3
X61.1
X61.5 FE Shld
X61.4 0
X61.3 4–20mA
X61.2 0–10vdc
X61.1 24vdc Power
Pressure Sensor or Temperature Sensor Input 2
LC_OptgMode
Sensor Select
Ext Inp X61 U/I
MRange TempSens
MRange PressSens
0–10vdc Source
X62.4
X62.2
X62.1
LC Mode Switch
4–20mA Source
X62.4
X62.3
X62.2
X62.1
LC Mode Contact
X62.5 FE Shld
X62.4 0
X62.3 4–20mA
X62.2 0–10vdc
X62.1 24vdc Power
Remote Setpoint or Remote Modulation Input 3
LC_OptgMode
Ext Inp X62 U/I
Ext MaxSetpoint
Ext MinSetpoint
User MaxLoadMod
LMV5 Output Terminals
FE Shld X63.3
0 X63.2
0/4–20 mA X63.1
4–20mA Signal
X63 Analog Output
OutValuSelection
CurrMode 0/4mA
Scale20mA perc
Scale20mA temp
Scale20mA press
Scale20mA angle
Scale 0/4mA
LMV5 Input / Output Terminals
2–Wire
X71.1
X71.2
3–Wire
X71.1
X71.2
X71.3
X71.1 Usensor
X71.2 Pulse In
X71.3 0
X71.4 FE Shld
Gas Flow Meter Pulse Input
PulseValueGas
2–Wire
X72.1
X72.2
3–Wire
X72.1
X72.2
X72.3
X72.1 Usensor
X72.2 Pulse In
X72.3 0
X72.4 FE Shld
Oil Flow Meter Pulse Input
PulseValueOil
VSD(VFD)
PE
High Voltage Pulsed DC – Separate conduit to reduce EMF
Sensor Speed wheel kit AGG5.305
Blue
Black 18–20 GA
Brown RUN SEPARATE
PE
3–Phase Motor
X70.5 FE Shld
X70.4 Reserved
X70.3 0
X70.2 Pulse In
X70.1 Usensor
VSD Speed Sensor Pulse Input
Num Puls per R
Standardization
StandardizedSp
Absolute Speed
Setteling Time
X73.6 FE Shld
X73.5 –
X73.4 + 4–20mA
Speed Signal Output to VSD
ContinousPurge
ReleasecontctVSD
TolQuickShutdown
24vdc alarm from VSD : Voltage signal will lockout LMV5
X73.3 Alarm
VSD Alarm Input
Fixed Function
Not Configurable
X73.2
X73.1
Run–Stop Dry Contact (24V Max)
ReleasecontctVSD
TolQuickShutdown

## CANbus Connections

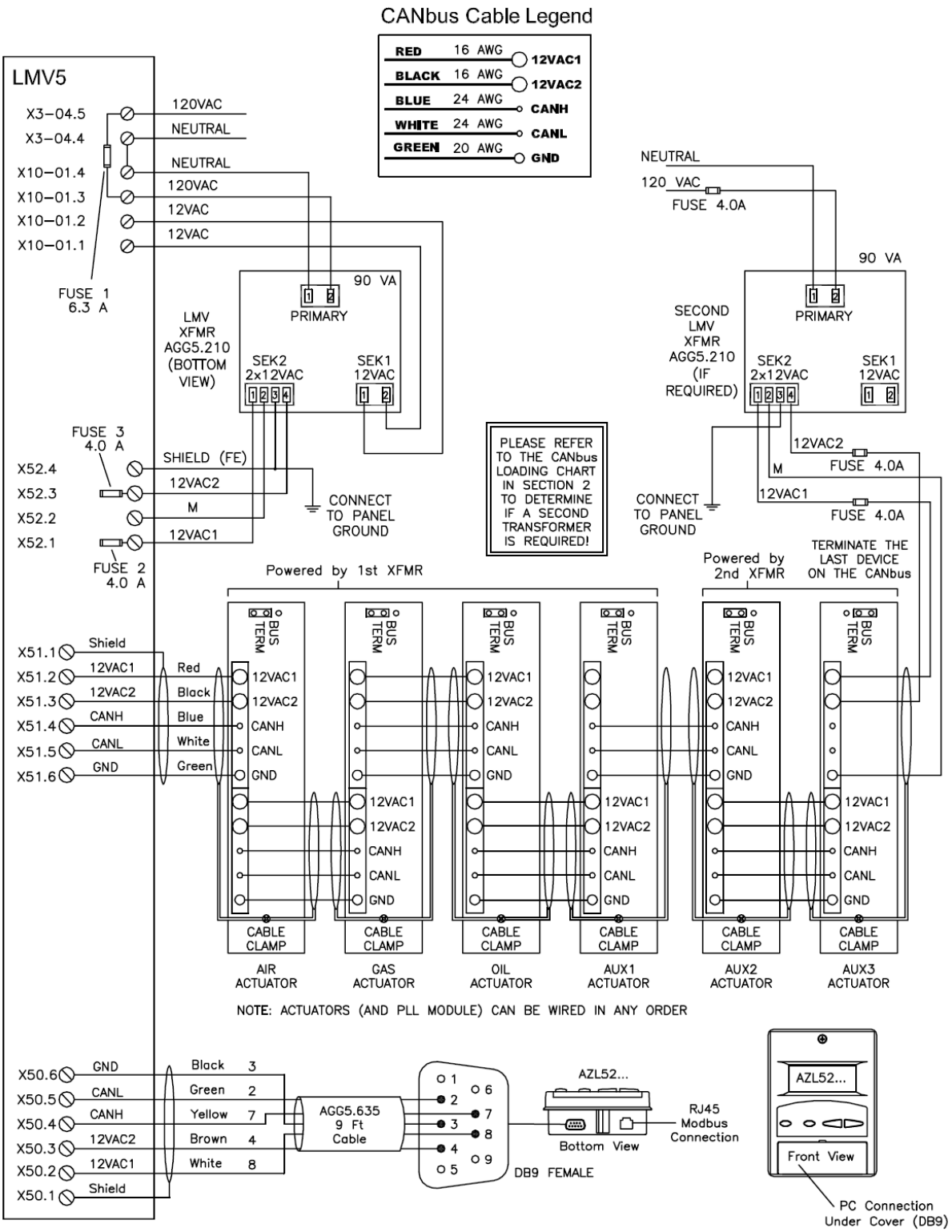

## Flame Detector Connections

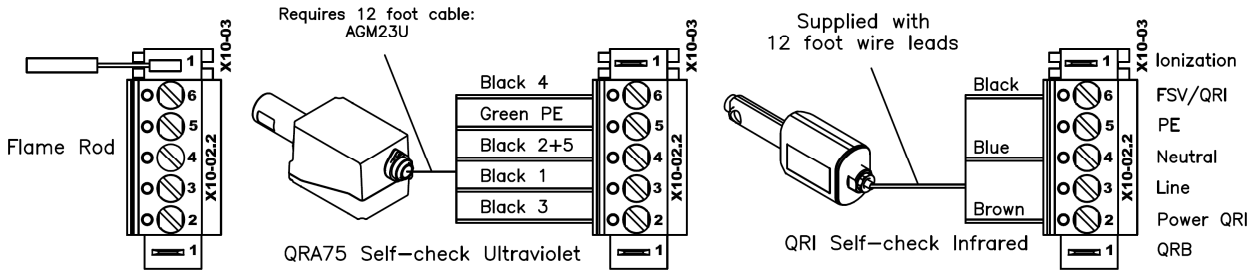


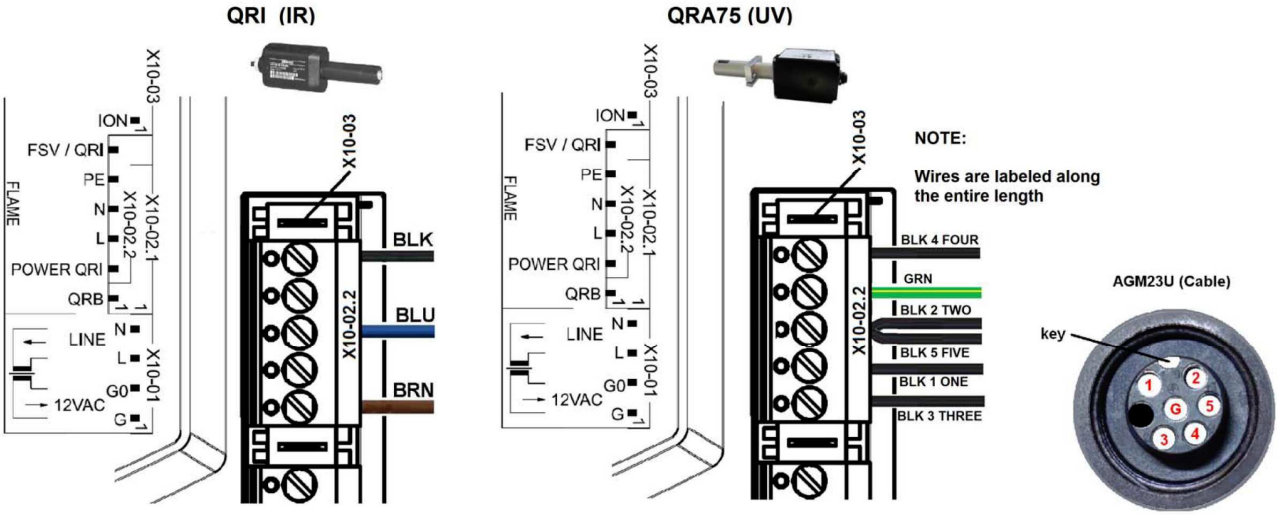

## O2 Trim Connections

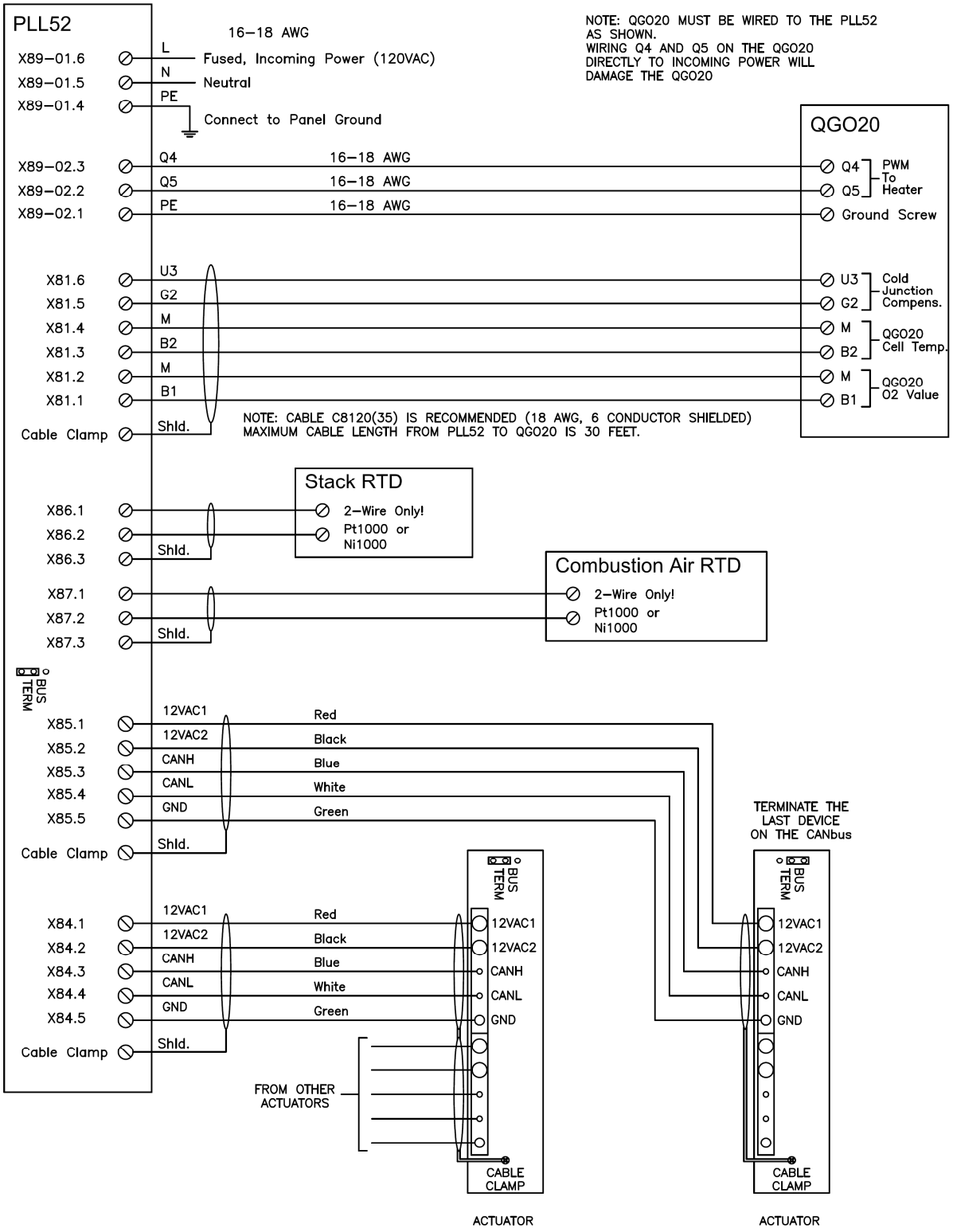

Intentionally Left Blank

Section 1 Overview

Section 2 Wiring

**Section 3 Parameters**

Section 4 Commissioning

Section 5 VSD

Section 6 $O_2$ Trim

Section 7 Troubleshooting

Section 8 Modbus

Section 9 ACS450

Section 10 Revision History

Appendix A Application Guide

Appendix B* Complimentary Products Guide

*Can be found at www.scccombustion.com.

HOME

Section 1 Overview

Section 2 Wiring

**Section 3 Parameters**

Section 4 Commissioning

Section 5 VSD

Section 6 $O_2$ Trim

Section 7 Troubleshooting

Section 8 Modbus

Section 9 ACS450

Section 10 Revision History

Appendix A Application Guide

Appendix B* Complimentary Products Guide

*Can be found at www.scccombustion.com.

HOME

# 3-1: Parameters Introduction

The Siemens LMV5 has a number of parameters that can be adjusted to suit the wide variety of applications that exist in the burner / boiler and industrial heating market.

These parameters are broken up into three main groups by password access:

**User** Level access does not require a password, and encompasses all of the parameters that an end user might have to view or adjust during the life of the burner / boiler.

**Service** Level access does require a password, and encompasses all of the user level parameters, plus additional parameters that a service technician might need to access to tune or maintain the burner / boiler.

**OEM** Level access requires a different password than the service level, and enables the OEM to access all available parameters, including safety-related parameters.

The parameters are accessed through the AZL5 in an outline-type structure. This structure is thoroughly illustrated with the LMV5 Parameter List in Section 3-2. An explanation of how to use the LMV5 Parameter List is shown below.

| Menu Path | Parameter | Default | Range | Description | 51.1 | 52.2 | 52.4 |
|---|---|---|---|---|---|---|---|
| States the menu path necessary to access the parameter. Bold indicates the highest menu level. | SafetyTme1Gas (O) | 5s | 1-10s | When a fuel train with a pilot is used, this setting defines… | | | |
| | SafetyTme1Oil (O) | 5s | 1-15s | States if the parameter is available on an LMV51.1, LMV52.2, or LMV52.4* | x | x | x |
| **Params & Display>** BurnerControl> Times> TimesStartup2 | Interval1Gas (S) | 2s | 0.2-63s | When a fuel train is selected that has a pilot, this setting defines… | | | |
| | Interval1Oil (S) | 2s | | States what password level is required to access the parameter. | | | |

*LMV51.0 is not shown in the Parameter List. It has the same parameters as the LMV51.1 with the exception that the LMV51.0 has no “load controller” parameters.

**Figure 3-1.1: LMV5 Parameter List Legend**

Section 3-3 shows the sequence diagrams for each fuel train available in the LMV5 with the exception of *HeavyOilHO* (heavy oil with direct spark). For an example of what each of these fuel trains looks like, see Section 4.

# 3-2: Parameter List


| A | |
|---|---|
| Absolute Speed | 39, 40 |
| actTmpFGR-sensor | 42 |
| **Actuator Addressing** | 37 |
| Actuator/VSD Activation | 20 |
| AdaptionLoad | 35 |
| **AdditionalSens** | 32 |
| Address | 36 |
| Adjust. Temp O2 | 26 |
| AfterburnTme | 9 |
| AirPressureTest | 12 |
| Air-related Load | 28 |
| AirTempX60PT1000 | 41, 44 |
| Alarm act/deact | 5 |
| **AlarmDelay** | 9 |
| **AlarmStartPrev** | 10 |
| **Allowed Pot.diff** | 44 |
| **Autom/Manual/Off** | 7, 21 |

| B | |
|---|---|
| Baudrate | 36 |
| **BurnerID **** | 6, 45 |

| C | |
|---|---|
| Calc PI again | 23 |
| **ColdStartOn** | 31 |
| CombEfficiency | 28, 41 |
| Config X5-03 | 13 |
| **Config_PS-VP/CPI** | 12, 16 |
| ContinuousPurge | 11 |
| ContPilotGas | 11 |
| ContPilotOil | 11 |
| **Curr Flow Rate** | 6, 45 |
| Current O2 Value | 6, 41 |
| CurrentFuel | 5 |
| CurrMode 0/4mA | 35 |
| **CurveParams **** | 19 |

| D | |
|---|---|
| Date | 5, 45 |
| DateFormat | 36 |
| DelayLackGas | 9 |
| DelayStartPrev | 9 |
| DelaytimeFGR Gas(Oil) | 42 |
| DeleteCurves | 37 |
| Diag Reg State | 28 |
| **Direction of rotation** | 37 |
| Display Contrast | 37 |
| **D-Part** | 29 |
| DriveLowfire Gas | 11 |
| DriveLowfire Oil | 11 |

| E | |
|---|---|
| **Ext Inp X61 U/I** | 34 |
| **Ext Inp X62 U/I** | 34, 43 |
| Ext MaxSetpoint | 34 |
| Ext MinSetpoint | 34 |
| ExtranLightTest | 14 |

| F | |
|---|---|
| Factor FGR Gas(Oil) | 42 |
| FanRunupTme | 7 |
| **FaultHistory** | 5 |
| FGR MaxPos Fact | 43 |
| FGR MinPos | 43 |
| FGR-Mode | 42 |
| **FGR-PS/FCC** | 12 |
| FGR-sensor | 42 |
| FlameSig ION | 15 |
| FlameSig QRI_B | 15 |
| FlueGasTemp | 6, 41 |
| **FlueGasTempSens** | 41 |
| **ForcedIntermit** | 10 |
| FuelSelect | 5 |
| **FuelTrainGas **** | 11 |
| **FuelTrainOil **** | 11 |

| G | |
|---|---|
| GasFiring | 6, 44 |
| GasPressureMax | 13 |
| **GasPressureMin** | 13 |
| GasStartCount | 6, 44 |
| Gateway status | 6 |
| GatewayBASoff | 6 |
| **GatewayBASon** | 6 |

| H | |
|---|---|
| HeavyOil | 16 |
| HeavyOilDirStart | 14 |
| **HomePos** | 17 |

| I | |
|---|---|
| I High-Fire | 23 |
| I Low-Fire | 23 |
| **IgnitionPos **** | 18 |
| **IgnOilPumpStart** | 10 |
| InputController | 13 |
| **InterfacePC** | 6 |
| Interval1Gas | 8 |
| Interval1Oil | 8 |
| Interval2Gas | 8 |
| Interval2Oil | 8 |
| **I-Part** | 29 |

| L | |
|---|---|
| Language | 36 |
| LC Analog Output | 44 |
| **LC_OptgMode** | 33, 43 |
| Load of Ignition | 26 |
| Load_SW_from_PC | 46 |
| **LoadCtrlSuspend** | 24 |
| LoadMaskHighLim | 20 |
| LoadMaskLowLimit | 20 |
| **Local / Remote** | 36 |
| LockoutCounter | 6 |
| **LockoutHistory** | 5 |

| L - cont | |
|---|---|
| LossFlameTest | 46 |
| LossOfFlame | 16 |
| **LowfireAdaptPtNo **** | 24 |

| M | |
|---|---|
| MainsFrequency | 11 |
| ManVar O2 Ctrl | 28 |
| Max Dyn Dev | 40 |
| Max Stat Dev | 40 |
| MaxLoadGas(Oil) | 19 |
| MaxSafetyTGas | 8 |
| MaxSafetyTOil | 8 |
| MaxTempFlGasGas | 41 |
| MaxTempFlGasOil | 41 |
| MaxTmeLowFire | 9 |
| **MaxTmeMod** | 32 |
| MaxTmeStage | 32 |
| MaxTmeStartRel | 10 |
| MeasureRangePtNi | 33, 43 |
| **MinActuatorStep** | 30 |
| MinLoadGas(Oil) | 19 |
| MinOnTmeOilPump | 8 |
| **MinT_PrepurgeGas** | 7 |
| **MinT_PrepurgeOil** | 7 |
| MinTmeHomeRun | 9 |
| MinTmeStartRel | 7 |
| **MRange PressSens** | 34 |
| MRange TempSens | 34 |

| N | |
|---|---|
| **NormalOperation** | 5 |
| **NormDirectStart** | 10 |
| Num Dev >0.3% | 40 |
| Num Dev >0.5% | 40 |
| Num Puls per R | 39 |
| **NumberTauSuspend** | 26 |
| NumFuelActuators | 21 |

| O | |
|---|---|
| **O2 Alarm** | 22 |
| O2 Content Air | 27 |
| **O2 Control** | 22 |
| **O2 CtrlThreshold** | 24 |
| **O2 MaxValue** | 22 |
| **O2 Sensor** | 40 |
| O2 Setpoint | 6, 41 |
| O2Ctrl activate | 7 |
| O2Ctrl/LimitrGas | 44 |
| O2Ctrl/LimitrOil | 44 |
| **O2InitOffset** | 26 |
| O2MaxManVariable | 25 |
| O2MinManVariable | 25 |
| O2ModOffset | 24 |
| **O2SensServTim** | 40 |
| **O2SensServTimRes** | 40 |
| **O2TrimBehavior** | 24 |
| OEM Password | 45 |
| OilPressureMax | 13 |
| OilPressureMin | 13 |
| OilPumpCoupling | 10 |
| OilStage1/Mod | 6, 44 |
| OilStage2 | 6, 44 |
| OilStage3 | 6, 44 |
| OilStartCount | 6, 44 |
| Operation Mode | 19 |
| OperationTempGas(Oil) | 43 |
| **OperatRampMod** | 21 |
| OperatRampStage | 21 |
| **OptgMode** | 22 |
| OptgMode COx Gas | 27, 44 |
| OptgMode COx Oil | 27, 44 |
| OutValuSelection | 34 |

| P | |
|---|---|
| P High-Fire | 23 |
| P Low-Fire | 23 |
| ParamSet Code | 17, 37 |
| ParamSet Vers | 17, 37 |
| Parity | 36 |
| PasswordTime | 36 |
| PhysicalUnits | 36 |
| Pos. Tolerance | 21 |
| PostpurgeLockout | 10 |
| PostpurgePos | 18 |
| **PostpurgeT1Gas** | 9 |
| **PostpurgeT1Oil** | 9 |
| PostpurgeT3Gas | 9 |
| PostpurgeT3long | 9 |
| PostpurgeT3Oil | 9 |
| **P-Part** | 29 |
| PreIgnitionTGas | 8 |
| PreIgnitionTOil | 8 |
| **PrepurgePos** | 18 |
| PrepurgePt1Gas | 8 |
| PrepurgePt1Oil | 8 |
| PrepurgePt3Gas | 8 |
| PrepurgePt3Oil | 8 |
| **PrepurgeSafeGas** | 7 |
| **PrepurgeSafeOil** | 7 |
| **PrepurgeTmeGas** | 7 |
| **PrepurgeTmeOil** | 7 |
| PressReacTme | 9 |
| **ProgramStop** | 19, 21 |
| **PulseValueGas** | 39 |
| **PulseValueOil** | 39 |
| PW Logout | 46 |

| Q | |
|---|---|
| QGO HeatingLoad | 41 |
| QGO Resistance | 41 |
| QGO SensorTemp | 41 |

| R | |
|---|---|
| ReacExtranLight | 14 |
| **ReacTmeLossFlame** | 14 |
| Release Stages | 32 |
| **ReleasecontctVSD** | 39 |
| Remote Mode | 36 |
| Reset Date Gas | 6, 45 |
| Reset Date Oil | 6, 45 |
| RotSpeed PS off | 13 |
| RotSpeed PS on | 13 |

| S | |
|---|---|
| SafetyLoop | 16 |
| **SafetyTme1Gas** | 8 |
| **SafetyTme1Oil** | 8 |
| **SafetyTme2Gas** | 8 |
| **SafetyTme2Oil** | 8 |
| Scale 0/4mA | 35 |
| Scale20mA angle | 35 |
| Scale20mA perc | 35 |
| Scale20mA press | 35 |
| Scale20mA temp | 35 |
| **SD_ModOff** | 30 |
| **SD_ModOn** | 30 |
| SD_Stage1Off | 30 |
| SD_Stage1On | 30 |
| SD_Stage2Off | 30 |
| SD_Stage3Off | 31 |
| SensExtranlGas | 15 |
| SensExtranlOil | 16 |
| SensOperPhGas | 15 |
| SensOperPhOil | 16 |
| **Sensor Select** | 33, 43 |
| SensPilotPhGas | 15 |
| SensPilotPhOil | 16 |
| ServicePassword | 45 |
| **SetLoad** | 7 |
| **Setp AddSensor** | 32 |

| S - cont | |
|---|---|
| Setpoint Output | 39 |
| **SetpointW1** | 5, 30 |
| SetpointW2 | 5, 30 |
| Setteling Time | 39 |
| ShutdownBehav | 21 |
| Skip PrepurgeGas | 10 |
| Skip PrepurgeOil | 10 |
| SLT Test | 46 |
| SLT-Testload Mod | 46 |
| SLT-Testload Stg | 46 |
| **StageLoad** | 31 |
| **StageSetp_Mod** | 31 |
| StageSetp_Stage | 31 |
| StandardFactor | 15 |
| **Standardization** | 39 |
| Standardize | 15 |
| StandardizedSp | 39 |
| StandardParam | 29 |
| Standby Error | 10 |
| **Start/PS-Valve** | 14 |
| StartAdaption | 35 |
| **Startmode** | 26 |
| **StartPoint Op** | 20 |
| StartRelease | 16 |
| **StartReleaseGas** | 12 |
| StartReleaseOil | 12 |
| State O2 Ctrl | 28 |
| **Status/Reset** | 5 |
| Sum/WinterTime | 36 |
| **SupAirTempSens** | 40 |
| SupplyAirTemp | 6, 41 |
| SW Version (AZL) | 37 |
| SW Version (LC) | 35 |
| SW Version (LMV) | 17 |
| SW Version (O2) | 42 |
| SW Version (VSD) | 40 |

| S - cont | |
|---|---|
| SW_FilterTmeCon | 30 |
| SystemOnPower | 6, 44 |

| T | |
|---|---|
| Tau High-Fire | 23 |
| Tau High-FireOEM | 23 |
| Tau Low-Fire | 23 |
| Tau Low-Fire OEM | 23 |
| Temp. ColdStart | 32 |
| ThresholdFGR Gas(Oil) | 42 |
| **ThresholdOff** | 32 |
| **ThresholdOn** | 31 |
| ThreshStage2On | 31 |
| ThreshStage3On | 31 |
| Time COx Alarm | 27 |
| Time EU/US | 36 |
| Time O2 Alarm | 22 |
| **TimeNoFlame** | 21 |
| **TimeOfDay** | 5, 45 |
| Timeout | 36 |
| TL_SD_On | 31, 43 |
| TL_Thresh_Off | 31, 43 |
| TolQuickShutdown | 39 |
| TotalHours | 6, 44 |
| TotalHoursReset | 6, 44 |
| TotalStartCount | 6, 44 |
| TotalStartCountR | 6, 44 |
| **Type Air Change** | 25 |
| Type O2 MaxValue | 22 |
| Type of Fuel | 27 |
| Type of Gateway | 6 |

| U | |
|---|---|
| User MaxLoadMod | 5 |
| User MaxLoadStg | 5 |

| V | |
|---|---|
| **ValveProvingType** | 16 |
| var. RangePtNi | 34 |
| Volume Gas | 6, 45 |
| Volume Gas R | 6, 45 |
| Volume Oil | 6, 45 |
| Volume Oil R | 6, 45 |
| VP_EvacTme | 16 |
| VP_FillTme | 17 |
| **VP_Tme_GasPress** | 17 |
| **VP_TmeAtmPress** | 17 |
| VSD Parameters | 39, 40 |

| W | |
|---|---|
| W3 | 36 |
| **Weekday** | 5 |

**A**

Actuators
- activation 20
- addressing 37
- direction of rotation 37
- potentiometer 44
- ramp speed 21

Alarm
- configuration 9-10
- silence 5

Analog Output 34-35

**B**

Backup / Restore 46
Burner ID 6, 45

**C**

Clock
- daylight savings 36
- set 5

Cold Start (see Load Controller)
Computer Interface 6

**F**

Fault History 5
FGR Special Functions 42-43
Flame Detector 14-16
Fuel Meter
- configuration 39
- read 6, 45
- reset 6, 45

Fuel Trains 11

**I**

Ignition Position (see Ratio Control Curve)
Ignition Timings 8
Inputs / Outputs (120 VAC)
- air pressure switch 12
- burner switch 13
- fan aux contactor 12
- high fuel pressure 13
- low fuel pressure 13
- proof of closure 12, 16

**L**

Load Controller
- cold start (thermal shock) 31-32
- configuration 33-34, 43
- on / off limits 30-31
- PID 29, 35

Load Limits 5, 19-20
Lockout History 5

**M**

Manual Operation 7, 21
Modbus
- activate / deactivate 6
- configuration 36

MTFI (see Ignition Timings)

**O**

O2 Trim
- commissioning 22-27
- configuration 40-41
- data 6, 28, 41
- reactivate 7

Operating Hours 6, 44
Output (see Inputs / Outputs)

**P**

Password Updating 45
PID (see Load Controller)
Prepurge / Postpurge 7-9
Program Stop 19, 21
PTFI (see Ignition Timings)

**R**

Ratio Control Curve
- curve points 19
- ignition positions 18
- postpurge positions 18
- prepurge positions 18
- start point 20

Repetition Counter 16

**S**

Setpoint 5, 30
Software Version
- AZL 37
- burner control (LMV) 17
- load controller 35
- $O_2$ trim module 42
- VSD 40

**T**

Temp Limiter 31, 43
Thermal Shock (see Load Controller)

**U**

Updating AZL Software 46

**V**

Valve Proving 16-17
Variable Speed Drive
- configuration 39
- data 40

| **LEGEND -** Password Access: (U)=User, (S)=Service, (O)=OEM, Shaded = Commonly Used, ** = Must Set, X = Has Function, / = Partial Function | | | | | **LMV** | | |
|---|---|---|---|---|---|---|---|
| **Menu Path** | **Parameter** | **Default** | **Range** | **Description** | 51.1 | 52.2 | 52.4 |
| **OperationalStat** | NormalOperation (U) | Read Only | | The normal AZL52 screen. In standby: Setpoint, Actual Value, Fuel and status can be displayed. In run: pertinent information will be displayed. Faults and warnings will always appear on the AZL52. Pressing Enter button will toggle information. | X | X | X |
| | Status/Reset (U) | Reset | | Shows the current fault if there is one, or displays 'No Fault' if there is not. If a fault is present, it can be reset by pressing Esc, then Enter. | | | |
| | FaultHistory (U) | Read Only | | Shows the last 21 faults. All lockouts are faults, not all faults are lockouts. Format: Class, Fuel, (fault) Code, Phase, Diag(nostic), Lo(a)d and Start No. | | | |
| | LockoutHistory (U) | Read Only | | Shows the last 9 lockouts. Format : Date, Time of day, C:(code), D:(diagnostic), P:(phase), Start No., Load, and Fuel. | | | |
| | Alarm act/deact (U) | activated | activated<br>deactivated | Functions as an alarm silence. Deactivates OUTPUT X3-01.2 which is the alarm output in the event of a lockout. Output will automatically reactivate if another lockout occurs or if system is reset or restarted. | | | |
| **Operation**><br>BoilerSetpoint | SetpointW1 (U) | Not Set | 0-3632 F<br>0-1449 PSIG | The LMV5 has 2 internal setpoints. ***SetpointW1*** is the normal internal setpoint. ***SetpointW2*** is an alternate internal setpoint. Changeover via dry contact between OUTPUT X62.1 and INPUT X62.2 if ***LC_OptgMode*** is set to IntLC. Contact open = W1, closed = W2. Max setpoint limited by sensor range (parameter ***TL_ThreshOff*** , ***MRange PressSens*** , ***MRange TempSens*** , or ***MeasureRangePtNi*** ). | X | X | X |
| | SetpointW2 (U) | | | | | | |
| **Operation**><br>User Maxload | User MaxLoadMod (U) | 100% | ***MinLoadGas*** -<br>***MaxLoadGas*** | Used to limit the maximum load (firing rate) without a password. For modulating burners. May be limited by ***MinLoadGas*** and ***MaxLoadGas*** . | X | X | X |
| | User MaxLoadStg (U) | S3 | S1-S3 | Used to limit the maximum load (firing rate) without a password. For staged burners. | | | |
| **Operation>**<br>Fuel | CurrentFuel (U) | Gas | Gas<br>Oil | Displays the fuel that is currently selected via hardwire, AZL52 or Modbus | X | X | X |
| | FuelSelect (U) | Gas | Gas<br>Oil | If INPUT X4-01.1 and INPUT X4-01.2 are not energized, fuel selection is 'internal' (soft) and can be set here or via Modbus. Energize (hard) X4-01.1 for gas or X4-01.2 for oil. Powering both terminals at the same time will cause a lockout. | | | |
| **Operation>**<br>Date/TimeOfDay><br>DisplayClock | Date (U) | Read Only | | Displays the current date. | X | X | X |
| | TimeOfDay (U) | | | Display the current time. | | | |
| | Weekday (U) | | | Displays the day of the week. | | | |
| **Operation>**<br>Date/TimeOfDay><br>SetClock | Date (U) | Set for local date and time at factory location in Europe. | | Sets the date. Select U.S. or European format at: *Params & Display > AZL > DateFormat* | X | X | X |
| | TimeOfDay (U) | | | Sets the time of day. 24 hour format: HH:MM | | | |
| | Weekday (U) | | | Sets the day of the week. | | | |

| **LEGEND -** Password Access: (U)=User, (S)=Service, (O)=OEM, Shaded = Commonly Used, ** = Must Set, X = Has Function, / = Partial Function | | | | | **LMV** | | |
|---|---|---|---|---|---|---|---|
| **Menu Path** | **Parameter** | **Default** | **Range** | **Description** | 51.1 | 52.2 | 52.4 |
| **Operation>** HoursRun | GasFiring (U) | Read Only | | Hours run firing gas. Reset / adjust: *Params & Display > HoursRun* | X | X | X |
| | OilStage1/Mod (U) | | | Hours run on modulating or stage 1 oil. Reset / adjust: *Params & Display > HoursRun* | | | |
| | OilStage2 (U) | | | Hours run on stage 2 oil. Reset / adjust at: *Params & Display > HoursRun* | | | |
| | OilStage3 (U) | | | Hours run on stage 3 oil. Reset / adjust at: *Params & Display > HoursRun* | | | |
| | TotalHoursReset (U) | | | Hours run on all fuels. Reset / adjust: *Params & Display > HoursRun* | | | |
| | TotalHours (U) | | | Displays the number of hours run on all fuels. Not resettable. | | | |
| | SystemOnPower (U) | | | Hours the system has been powered. Not resettable. | | | |
| **Operation>** StartCounter | GasStartCount (U) | Read Only | | Number of startups on gas. Reset at: *Params & Display > StartCounter* | X | X | X |
| | OilStartCount (U) | | | Number of startups on oil. Reset at: *Params & Display > StartCounter* | | | |
| | TotalStartCountR (U) | | | Number of startups on all fuels. Reset at: *Params & Display > StartCounter* | | | |
| | TotalStartCount (U) | | | Displays the number of startups on all fuels. Not resettable. | | | |
| **Operation**> Fuel Meter | Curr Flow Rate (U) | Read Only | | Displays the current flow rate of fuel, gas or oil. | | | |
| | Volume Gas (U) | | | Totalized volume of gas since the last reset. | | | |
| | Volume Oil (U) | | | Totalized volume of oil since the last reset. | | | |
| | Volume Gas R (U) | Reset Only | | Resets the totalized volume of gas. | | X | X |
| | Volume Oil R (U) | | | Resets the totalized volume of oil. | | | |
| | Reset Date Gas (U) | Read Only | | Displays the date when the volume of gas was last reset. Cannot be changed. | | | |
| | Reset Date Oil (U) | | | Displays the date when the volume of oil was last reset. Cannot be changed. | | | |
| **Operation** | LockoutCounter (U) | Read Only | | Displays the total number of lockouts that have occurred. | X | X | X |
| **Operation>** O2 Module | Current O2 Value (U) | Read Only | | Current O2 sensor reading. Wet basis - will be lower than dry O2 reading. | | | |
| | O2 Setpoint (U) | | | O2 target value for the current load can be viewed here. | | | |
| | SupplyAirTemp (U) | | | Current combustion air temperature if equipped with ambient temp sensor. | | X | X |
| | FlueGasTemp (U) | | | Current flue gas temperature if equipped with flue gas temp sensor. | | | |
| | CombEfficiency (U) | | | The calculated value of the combustion efficiency based on the wet O2 value, combustion air temperature, and flue gas temperature. | | | |
| **Operation** | BurnerID (U) | Read Only | | Burner identification. Adjust at: *Updating > BurnerID* (requires OEM password) | X | X | X |
| **Operation**> OptgModeSelect | InterfacePC (U) | press Enter to activate, press Esc to deactivate | | This activates COM 1, the DB9 connector on the front of the AZL to use with ACS450. | X | X | X |
| | GatewayBASon (U) | press Enter to activate | | This activates or deactivates COM 2, the RJ45 jack on the bottom of the AZL, for Modbus or eBUS communication. This port uses RS-232 communications. | | | |
| | GatewayBASoff (U) | press Enter to deactivate | | | | | |
| | Gateway status (U) | Read Only | | Displays if the gateway is activated or deactivated. | | | |
| | Type of Gateway (U) | Modbus | Modbus<br>eBus<br>Data output | This parameter configures the protocol of Com 2. Select the proper communication protocol (Modbus, eBUS) or select 'Data output' for use with trending software. | | | |

| **LEGEND -** Password Access: (U)=User, (S)=Service, (O)=OEM, Shaded = Commonly Used, ** = Must Set, X = Has Function, / = Partial Function | | | | | **LMV** | | |
|---|---|---|---|---|---|---|---|
| **Menu Path** | **Parameter** | **Default** | **Range** | **Description** | 51.1 | 52.2 | 52.4 |
| **Operation** | O2Ctrl activate (U) | deact | activated<br>deactivated | Activates the O2 trim system. If control automatically deactivates, can be reactivated here. | | X | X |
| **ManualOperation** | SetLoad (U) | Not Set | 0-100%<br>S1-S3 | When in manual mode (see next parameter), this sets firing rate (load). Other parameter settings may limit the maximum achievable load. | X | X | X |
| | Autom/Manual/Off (U) | Automatic | Automatic<br>Burner off<br>Manual | 1) Automatic - Enables the burner allowing it to respond to setpoints and switch on / switch off points.<br>2) Burner off - Manually turn the burner off.<br>3) Manual - Enables the load of the burner to be set with ***SetLoad*** . When in manual, setpoints and switch on/ off points are ignored. If INPUT X5-03.1 (burner switch) is enabled, it must be energized for the LMV5 to start, regardless of parameter setting. | | | |
| **Params & Display**><br>BurnerControl><br>Times><br>TimesStartup1 | MinTmeStartRel (S) | 1s | 0.2-63s | When the LMV5 gets a call for heat, this defines the minimum time the LMV5 will hold in phase 21. Start releases could be made, but the LMV5 will still hold in phase 21 for this period of time. | X | X | X |
| | FanRunupTme (S) | 2s | 0.2-63s | Time allowed to let the fan accelerate up to speed before the actuators start driving to prepurge. | | | |
| NOTE: There are numerous prepurge time parameters to provide options for purging FGR piping. For boilers without FGR, these times should be set the following way. ***PrepurgeTmeGas(Oil)*** should be set for the desired prepurge time after a normal shutdown. ***PrepurgeSafeGas(Oil)*** should be set for the desired prepurge time after a safety shutdown. ***PrepurgePt1Gas(Oil)*** and ***PrepurgePt3Gas(Oil)*** should be set to 0.2 seconds so that they are ignored. See below for more detail on each parameter. | | | | | | | |
| **Params & Display**><br>BurnerControl><br>Times><br>TimesStartup1 | PrepurgeTmeGas (S) | 120s | ***MinT_PrepurgeGas(Oil)*** - 63min | Prepurge timing begins when actuators / VSD have reached their specified purge positions. Total prepurge time (phase 30-34) will be equal to this setting or longer (other prepurge time parameters may cause a longer prepurge). This parameter cannot be set less than ***MinT_PrepurgeGas*** or ***MinT_PrepurgeOil*** respectively. | X | X | X |
| | PrepurgeTmeOil (S) | 120s | | | | | |
| **Params & Display**><br>BurnerControl><br>Times><br>TimesStartup1 | MinT_PrepurgeGas (O) | 20s | 0.2s-63min | Sets the minimum allowable time for ***PrepurgeTmeGas(Oil)*** above. This parameter should be set by the OEM for code-required air exchanges of combustion chamber volume. | X | X | X |
| | MinT_PrepurgeOil (O) | 15s | | | | | |
| | PrepurgeSafeGas (S) | 20s | ***MinT_PrepurgeGas(Oil)*** - 63min | After a safety shutdown, this time replaces ***PrepurgePt1Gas(Oil)*** and ***PrepurgePt3Gas(Oil)*** . The LMV5 will stay in phase 30 for half of this time. Then the LMV5 will progress to phase 34 for half of this time or longer (if ***PrepurgeTmeGas(Oil)*** is set larger than this parameter). This parameter cannot be set less than ***MinT_PrepurgeGas*** or ***MinT_PrepurgeOil*** respectively. Setting has no effect on startups after a normal shutdown. | | | |
| | PrepurgeSafeOil (S) | 15s | | | | | |

| **LEGEND -** Password Access: (U)=User, (S)=Service, (O)=OEM, Shaded = Commonly Used, ** = Must Set, X = Has Function, / = Partial Function | | | | | **LMV** | | |
|---|---|---|---|---|---|---|---|
| **Menu Path** | **Parameter** | **Default** | **Range** | **Description** | 51.1 | 52.2 | 52.4 |
| **Params & Display>** BurnerControl> Times> TimesStartup1 | PrepurgePt1Gas (S) | 0.2s | 0.2s-63min | Sets the time the LMV5 stays in phase 30 on startups after a normal shutdown. Setting has no effect on startups after a safety shutdown. If an Aux3 actuator is used, phase 30 is the time when the air actuator / VSD are at purge position and the Aux3 actuator is at home position. | X | X | X |
| | PrepurgePt1Oil (S) | | | | | | |
| | PrepurgePt3Gas (S) | 0.2s | 0.2s-63min | Sets the minimum time the LMV5 stays in phase 34 on startups after a normal shutdown. Time will be longer if ***PrepurgeTmeGas(Oil)*** is set larger than ***PrepurgePt1Gas(Oil)*** + ***PrepurgePt3Gas(Oil)*** . Setting has no effect on startups after a safety shutdown. If an Aux3 actuator is used, phase 34 is the time when the air actuator / VSD are at purge position and the Aux3 actuator is also at purge position. | | | |
| | PrepurgePt3Oil (S) | | | | | | |
| **Params & Display>** BurnerControl> Times> TimesStartup1 | PreIgnitionTGas (S) | 2s | 0.2- 63s | This defines the time the ignition transformer (OUTPUT X4-02.3) alone is energized before the pilot valve (OUTPUT X9-01.2) or main valves (for direct spark fuel trains) become energized. Sets the length of phase 38. | X | X | X |
| | PreIgnitionTOil (S) | 2s | 0.2- 44s | | | | |
| | MinOnTmeOilPump (S) | 5s | 0.2-63s | When LO w Gasp (Light Oil with Gas pilot) is selected, this is the minimum time the oil pump can run (OUTPUT X6-02.3) before the LMV5 attempts to light the pilot, (OUTPUT X9-01.2). Time starts in phase 22, and will hold in phase 36 until this parameter times out. | | | |
| **Params & Display>** BurnerControl> Times> TimesStartup2 | SafetyTme1Gas (O) | 5s | 1-***MaxSafetyTGas*** | When a fuel train with a pilot is used, this setting defines the overlap of the spark (OUTPUT X4-02.3) and the pilot valve (OUTPUT X9-01.2). After this time expires, spark is de-energized but the PV remains open if a flame is present. If a flame is not sensed, a lockout occurs. If directly spark igniting the main fuel, this defines the overlap of the spark and the main fuel valves. This time is also known as TSA1. Sets the length of phases 40-42. | X | X | X |
| | SafetyTme1Oil (O) | 5s | 1-***MaxSafetyTOil*** | | | | |
| | Interval1Gas (S) | 2s | 0.2-63s | When a fuel train is selected that has a pilot, this setting defines the pilot stabilizing period. This time begins after ***SafetyTme1Gas(Oil*** ) expires. During this period, only the pilot valve is open. The spark is de-energized. If directly spark igniting the main fuel, this defines the main stabilizing period. Sets the length of phase 44. | | | |
| | Interval1Oil (S) | 2s | | | | | |
| | SafetyTme2Gas (O) | 5s | 1-***MaxSafetyTGas*** | When a fuel train with a pilot is used, this defines the overlap of the pilot (OUTPUT X9-01.2) and the main fuel valves. After this time expires the pilot is de-energized if continuous pilot is not selected. Shorter times are more safe. No effect for fuel trains having direct spark ignition of main fuel. This time is also known as TSA2. Sets the length of phase 50. | | | |
| | SafetyTme2Oil (O) | 5s | 1-***MaxSafetyTOil*** | | | | |
| | MaxSafetyTGas (O) | 10s | 1-10s | Sets the maximum allowable time for ***SafetyTme1Gas(Oil)*** and ***SafetyTme2Gas(Oil)*** above. | | | |
| | MaxSafetyTOil (O) | 15s | 1-15s | | | | |
| | Interval2Gas (S) | 2s | 0.2-630s | Defines the main flame stabilizing period at ignition position before modulation. This time begins after ***SafetyTme2Gas(Oil)*** expires. During this period, only the main fuel valves are open. The pilot valve is de-energized unless continuous pilot is selected. No effect for fuel trains having direct spark ignition of main fuel. Sets the length of phase 52. | | | |
| | Interval2Oil (S) | 2s | | | | | |

| **LEGEND -** Password Access: (U)=User, (S)=Service, (O)=OEM, Shaded = Commonly Used, ** = Must Set, X = Has Function, / = Partial Function | | | | | **LMV** | | |
|---|---|---|---|---|---|---|---|
| **Menu Path** | **Parameter** | **Default** | **Range** | **Description** | 51.1 | 52.2 | 52.4 |
| **Params & Display>** BurnerControl> Times> TimesStartup2 | PressReacTme (S) | 2s | 0.2-***Max SafetyTGas*** | Sets the time that the LMV5 will ignore the high and low gas pressure switch inputs after the main gas valves open. This is done so that pressure shocks do not cause erroneous alarms on properly adjusted high or low automatic reset gas pressure switches. Does not work with manual reset switches. | X | X | X |
| **Params & Display>** BurnerControl> Times> TimesShutdown | MaxTmeLowFire (S) | 45s | 0.2-630s | The allowable time to let the LMV5 achieve low fire shutdown after a call for heat is removed via internal load controller or INPUT X5-03.1. Setting does not affect fuel valve closing in the event of a safety shutdown. | X | X | X |
| | AfterburnTme (S) | 8s | 0.2-63s | Defines the permissible time for a flame to be detected after the main fuel valves are closed without causing a startblock or alarm. Useful for air postpurged oil nozzles. | | | |
| | PostpurgeT1Gas (S) | 30s | 0.2s-63min | Defines the mandatory postpurge period. Even if the direct start option is selected and a call for heat exists, the LMV5 will only go into prepurge after this period times out. | | | |
| | PostpurgeT1Oil (S) | 30s | | | | | |
| | PostpurgeT3Gas (S) | 5s | 0.2s-63min | Defines an optional postpurge period. If the direct start option is selected and a call for heat exists, the LMV5 will go directly into prepurge after ***PostpurgeT1Gas(Oil)*** . | | | |
| | PostpurgeT3Oil (S) | 5s | | | | | |
| | PostpurgeT3long (S) | 0min | 0-65535min | Defines a postpurge time that is in addition to ***PostpurgeT3Gas(Oil)*** . If the direct start option is selected and a call for heat exists, the LMV5 will go directly into prepurge after ***PostpurgeT1Gas(Oil)*** expires. | | | X |
| | MinTmeHomeRun (O) | 1s | 0.2-63s | The minimum time the LMV5 will wait in phase 10 before proceeding to phase 12. | X | X | X |
| | DelayLackGas (S) | 10s | ***MinTmeHomeRun*** -63s | If there is a lack of gas pressure (low gas pressure switch open), then the LMV5 will wait this period of time before attempting to relight, provided that the repetition counter ***RepetitCounter*** for gas is set for more than one (not done in the US). This time period will double after the first relight attempt. This doubling would occur if ***RepetitCounter*** were set to 3 or greater. Cannot be set for a shorter time than ***MinTmeHomeRun*** . | | | |
| **Params & Display>** BurnerControl> Times> TimesGeneral | AlarmDelay (S) | 10s | 0.4-630s | If a condition exists that does not open the safety loop but does prevent the LMV5 from starting when there is a call for heat, this specifies the period of time that can elapse with this condition before the alarm is energized. If ***AlarmStartPrev*** (alarm in the case of start prevention) is deactivated, setting this time has no effect. | X | X | X |
| | DelayStartPrev (S) | 0.4s | 0.4-630s | Period of time before a start prevention is displayed on the AZL. When there is a call for heat, and a start prevention occurs that does not open the safety loop but does prevent the LMV5 from starting, this specifies the period of time that can elapse before the condition is displayed on the AZL. | | | |

| **LEGEND -** Password Access: (U)=User, (S)=Service, (O)=OEM, Shaded = Commonly Used, ** = Must Set, X = Has Function, / = Partial Function | | | | | **LMV** | | |
|---|---|---|---|---|---|---|---|
| **Menu Path** | **Parameter** | **Default** | **Range** | **Description** | 51.1 | 52.2 | 52.4 |
| **Params & Display**><br>BurnerControl><br>Times><br>TimesGeneral | PostpurgeLockout (S) | 120s | 0.2s-63min | If a lockout condition occurs, and the combustion air fan was running, it will continue running in the lockout phase (phase 00) for this period of time. This time replaces the postpurge time in the event of a lockout. If the combustion air fan was not running, the fan will remain off for the rest of the lockout phase. | X | X | X |
| | MaxTmeStartRel (S) | 120s | 0.2s-63min | When the LMV5 gets a call for heat, this is the maximum time the LMV5 will hold in phase 21 waiting for a start release. If this time expires and the start release is not made, the LMV5 will go into alarm.<br>See: *Params & Display > BurnerControl > Times >TimesStartup1 > MinTmeStartRel* | | | |
| **Params & Display>**<br>BurnerControl><br>Configuration><br>ConfigGeneral | AlarmStartPrev (S) | deact | activated<br>deactivated | Determines if the alarm OUTPUT X3-01.2 will be energized in the event of a start prevention (an alarm in standby - Phase 12). ***AlarmDelay*** sets how long the LMV5 will wait before going into alarm. | X | X | X |
| | Standby Error (S) | deact | activated<br>deactivated | If this is set to activated, a fault will occur if the safety loop is opened in phase 12 (standby). If deactivated, the safety loop can be open when in phase 12 without a fault. | | | |
| | NormDirectStart (S) | Normal Start | NormalStart<br>DirectStart | Enables the LMV5 to skip postpurge (T3) time, and go directly into prepurge if there is a call for heat during postpurge T1. If set to DirectStart, a 3-way valve on OUTPUT X4-03.3 must be used to check the air pressure switch. | | | |
| | OilPumpCoupling (S) | Magnet-coupl | Magnetcoupl<br>Directcoupl | Combined with IgnOilPumpStart determines the behavior of OUTPUT X6-02.3:<br>1) Magnetcoupl - the output will energize, in either phase 22 or 38, depending on the setting of ***IgnOilPumpStart*** . Output will de-energize as soon as main oil valves close.<br>2) Directcoupl - the output will energize at the same time as the blower, and de-energizes 15 seconds after the blower. | | | |
| | IgnOilPumpStart (S) | on in Ph22 | on in Ph22<br>on in Ph38 | If *Magnetcoupl* is selected above, this determines when OUTPUT X6-02.3 is energized. If a direct spark oil train is selected, spark will occur during prepurge if set to Ph22. | | | |
| | ForcedIntermit (S) | activated | activated<br>deactivated | When activated, this setting forces the LMV5 to shut the burner down, every 23 hours 50 minutes. The burner will automatically restart. The purpose of this is to check and cycle safety devices. If a non-self check flame scanner is used, this must be activated. | | | |
| | Skip PrepurgeGas (S) | deact | activated<br>deactivated | If activated, prepurge for gas will be skipped. Not recommended for most burners. | | | |
| | Skip PrepurgeOil (O) | deact | | If activated, prepurge for oil will be skipped. Not recommended for most burners. | | | |

| **LEGEND -** Password Access: (U)=User, (S)=Service, (O)=OEM, Shaded = Commonly Used, ** = Must Set, X = Has Function, / = Partial Function | | | | | **LMV** | | |
|---|---|---|---|---|---|---|---|
| **Menu Path** | **Parameter** | **Default** | **Range** | **Description** | 51.1 | 52.2 | 52.4 |
| **Params & Display>** BurnerControl> Configuration> ConfigGeneral | ContinuousPurge (S) | deact | activated<br>deactivated<br>off Sloop<br>deac/VSD-SL | Sets the operation of the blower.<br>1) activated - blower runs in all phases. Typically used to prevent return heat from coming back into the burner.<br>2) deactivated - blower is called on and off as needed.<br>3) off Sloop - continuous purge is activated, but the fan will stop if the safety loop is opened.<br>4) deac/VSD-SL - continuous purge is deactvated and the VSD will be set to zero speed if the safety loop is opened. | | | |
| | DriveLowfire Gas (O) | Lowfire P54 | LowfireP54<br>LowfireP50 | Controls the action of the actuators when lighting the main burner flame.<br>1) LowFireP50 - the LMV5 will start driving to ***StartPointOp*** (typically point 1 - low fire) at the beginning of phase 50. This is typically used if a fuel rich light off is needed.<br>2) LowFireP54 -the LMV5 will not start driving to ***StartPointOp*** until the beginning of phase 54. | X | X | X |
| | DriveLowfire Oil (O) | Lowfire P54 | | | | | |
| | FuelTrainGas (O)** | Not Set | DirectIgniG<br>Pilot Gp1<br>Pilot Gp2 | Selects the fuel train for gas.<br>1) DirectIgniG - Direct spark ignition gas.<br>2) Pilot Gp1 - Pilot ignition for European gas burners<br>3) Pilot Gp2 - Pilot ignition for North American gas burners (See Section 5). | | | |
| | FuelTrainOil (O)** | Not Set | LightOilLO<br>HeavyOilHO<br>LO w Gasp<br>HO w Gasp | Selects the fuel train for oil.<br>1) LightOilLO - Direct spark ignition for light oil.<br>2) HeavyOilHO - Direct spark ignition for heavy oil.<br>3) LO w Gasp - Gas pilot ignition for light oil.<br>4) HO w Gasp - Gas pilot ignition for heavy oil. | | | |
| **Params & Display>** BurnerControl> Configuration> ConfigGeneral> FuelTrainReset | FuelTrainGas (O) | Go into parameter then press Enter to reset | | Resets the fuel train to a value of "invalid" (means not set, undefined). This allows removal a previously configured fuel train, if it is no longer being used. Resetting this will also remove the fuel-air ratio curves for the fuel that is reset. | X | X | X |
| | FuelTrainOil (O) | | | | | | |
| **Params & Display>** BurnerControl> Configuration> ConfigGeneral | ContPilotGas (O) | deact | activated<br>deactivated | Activates or deactivates a continuous pilot. Each fuel can be configured separately. In this case continuous pilot is defined as a pilot from the end of phase 42 (normal pilot light off) to the end of phase 62 (low fire shut down). | | X | X |
| | ContPilotOil (O) | deact | | | | | |
| | MainsFrequency (O) | 60 Hz | 50 Hz<br>60 Hz | Set to the freqency of the local AC power grid. For North America select 60 Hz. | X | X | X |

| **LEGEND -** Password Access: (U)=User, (S)=Service, (O)=OEM, Shaded = Commonly Used, ** = Must Set, X = Has Function, / = Partial Function | | | | | **LMV** | | |
|---|---|---|---|---|---|---|---|
| **Menu Path** | **Parameter** | **Default** | **Range** | **Description** | 51.1 | 52.2 | 52.4 |
| **Params & Display>**<br>BurnerControl><br>Configuration><br>ConfigIn/Output | StartReleaseGas (O) | StartRel Gas | deactivated<br>StartRelGas<br>CPI Gas<br>CPI Gas+Oil<br>CPI Oil | Sets the function of INPUT X7-03.2.<br>1) deactivated - terminal has no function.<br>2) StartRelGas - input must be energized in phase 21-62.<br>3) CPI Gas - proof of closure (POC) for gas valves.<br>4) CPI Gas+Oil - proof of closure (POC) for gas and oil valves wired on the same terminal.<br>5) CPI Oil - proof of closure (POC) for oil valves. | x | x | x |
| | StartReleaseOil (O) | activated | activated<br>deactivated<br>HT/FG-RedCo | Sets the function of INPUT X6-01.1.<br>1) activated - input must be energized in phase 21-62, typically used for an atomizing media pressure switch.<br>2) deactivated - terminal has no function.<br>3) HT/FG-RedCo - input for a redundant contact when using an external flame safeguard. This input is inverse of the main contact on terminal X6-01.3. See parameter ***HeavyOilDirStart*** for more information on external flame safeguards (LMV52 only). | / | x | x |
| | AirPressureTest (O) | activated | activated<br>deactivated<br>deactInStby | Activates or deactivates INPUT X3-02.1, the combustion air pressure switch. Activate for forced or induced draft burners. Can also be set to "deactInStby", so that the status of the air pressure switch is not evaluated in standby. However, the burner will not start until INPUT X3-02.1 is de-energized. | x | x | x |
| | Config_PS-VP/CPI (O) | CPI Gas | PS-VP<br>CPI Gas<br>CPI Gas+Oil<br>CPI Oil | Sets the function of INPUT X9-03.2.<br>1) PS-VP - pressure switch for use with automatic valve proving.<br>2) CPI Gas - proof of closure (POC) for gas valves.<br>3) CPI Gas+Oil - POC for gas and oil valves on the same terminal.<br>4) CPI Oil - POC for oil valves.<br>Note: Input can be deactivated by setting to PS-VP and de-activating valve proving at:<br>*Params & Display > BurnerControl > ValveProving > ValveProvingType* | x | x | x |
| | FGR-PS/FCC (O) | FCC | FCC<br>FGR-PS<br>deactivated<br>PSdeactStby<br>PS VSD | Sets the function of INPUT X4-01.3.<br>1) FCC - checks the status of the fan motor starter.<br>2) FGR-PS - checks the status of an FGR pressure switch.<br>3) deactivated - terminal has no function.<br>4) PSdeactStby - checks the status of an FGR pressure switch but the pressure switch is not evaluated in standby.<br>5) PS VSD - checks the status of a second air pressure switch based on VSD speed. See ***RotSpeed PS on*** and ***RotSpeed PS off*** (not available on LMV51.1). | / | x | x |

| **LEGEND -** Password Access: (U)=User, (S)=Service, (O)=OEM, Shaded = Commonly Used, ** = Must Set, X = Has Function, / = Partial Function | | | | | **LMV** | | |
|---|---|---|---|---|---|---|---|
| **Menu Path** | **Parameter** | **Default** | **Range** | **Description** | 51.1 | 52.2 | 52.4 |
| **Params & Display>**<br>BurnerControl><br>Configuration><br>ConfigIn/Output | RotSpeed PS on (S) | 80% | 0-100% | If FGR-PS/FCC is set to PS VSD, then INPUT X4-01.3 must be energized from this % VSD and higher. Must be set higher than ***RotSpeed PS off*** . | | X | X |
| | RotSpeed PS off (S) | 50% | 0-100% | If FGR-PS/FCC is set to PS VSD, then INPUT X4-01.3 must be de-energized from this % VSD and lower. Must be set lower than ***RotSpeed PS on*** . | | X | X |
| | InputController (O) | activated | activated<br>deactivated | Sets the function of INPUT X5-03.1. If activated, X5-03.1 must be energized to permit the LMV5 to fire. This setting is typically used with a hardwired burner on-off switch. On an LMV5 equipped with an internal load controller (LMV51.1 and higher), the internal load controller may remove the call for heat and shut down the burner even if X5-03.1 is energized. If deactivated, X5-03.1 has no function when in any internal load control mode. The LMV5 can also be given permission to fire via Modbus if X5-03.1 is deactivated. | X | X | X |
| | Config X5-03 (S) | LMV5x std | LMV5x std<br>LMV2/3 std<br>LMV2/3 inv<br>DeaO2/Stp36<br>CoolFctStby<br>AutoDeactO2 | Sets the function of INPUTS X5-03.2 and X5-03.3.<br>1) LMV5x std - floating bumping load control is retained.<br>2) LMV2/3 std or LMV2/3 inv - normal or inverted LMV5 2/3 staged oil functionality.<br>3) DeaO2/Stp36 - energizing terminal X5-03.2 disables O2 trim and de-energizing enables O2 trim (LMV52 only). Also, energizing terminal X5-03.3 allows the LMV5 to progress past phase 36 (de-energizing stops the LMV5 in phase 36 indefinitely).<br>4) CoolFctStby - only used on an LMV50.<br>5) AutoDeactO2 - energizing X5-03.2 will deactivate the O2 trim by setting the O2 trim mode to "auto deact". O2 trim mode must be set to "ConAutoDeac" for the AutoDeactO2 to function. De-energizing sets trim mode back to "ConAutoDeac". | / | / | / |
| | GasPressureMin (O) | activated | activated<br>deactivated<br>deact xOGP | Sets the function of INPUT X9-03.4 for the low gas pressure switch.<br>1) activated - input is expected to be energized when firing gas, or when using any oil train that requires a gas pilot.<br>2) deactivated - terminal has no function.<br>3) deact xOGP - input is expected to be energized only when firing gas. | X | X | X |
| | GasPressureMax (O) | activated | activated<br>deactivated | Sets the function of INPUT X9-03.3 for a high gas pressure switch. Activate for gas fired installations that use a high gas pressure switch. | | | |
| | OilPressureMin (O) | activated | activated<br>deactivated<br>act from ts | Sets the function of INPUT X5-01.2 for a low oil pressure switch.<br>1) activated - input is expected to be energized by phase 38.<br>2) deactivated - terminal has no function.<br>3) act from ts - input is expected to be energized by phase 40. | | | |
| | OilPressureMax (O) | activated | activated<br>deactivated | Sets the function of INPUT X5-02.2 for the high oil pressure switch. | | | |

| **LEGEND -** Password Access: (U)=User, (S)=Service, (O)=OEM, Shaded = Commonly Used, ** = Must Set, X = Has Function, / = Partial Function | | | | | **LMV** | | |
|---|---|---|---|---|---|---|---|
| **Menu Path** | **Parameter** | **Default** | **Range** | **Description** | 51.1 | 52.2 | 52.4 |
| **Params & Display>** BurnerControl> Configuration> ConfigIn/Output | HeavyOilDirStart (O) | 38/44..62 | 38/44..62<br>act 21..62<br>HTempGuard<br>ext.FlameGd<br>deactivated<br>activ 38/44 | Sets the function of INPUT X6-01.3.<br>1) 38/44..62 - input must be energized in phase 38 and / or 44, and during phases 50 thru 62.<br>2) act 21..62 - input must be energized for phase 21 thru 62. This setting is useful for a low oil temperature switch.<br>3) HTempGuard - only used on an LMV50.<br>4) ext.FlameGd - input is used for a flame signal from an external flame safeguard. If used, no flame detector may be connected to terminal X10.<br>5) deactivated - terminal has no function.<br>6) activ 38/44 - input must be energized in phase 38 or 44. | / | / | / |
| | Start/PS-Valve (S) | Start Signal | StartSignal<br>PS Relief<br>PS Reli_Inv | Sets the function of OUTPUT X4-03.3.<br>1) StartSignal - output is energized from phase 21 (before the blower) thru phase 78 (after postpurge), and is suited to open an outside air or stack damper. If ContinuousPurge is activated, this terminal will be energized with the fan.<br>2) PS Relief - wired to a 3-way valve used to check the action of combustion air pressure switch and is necessary if direct start is used. Energizing vents the combustion air pressure switch to atmosphere during phase 79.<br>3) PS Reli_Inv - the action is opposite of PS Relief mode, thus de-energizing vents the combustion air pressure switch to atmosphere during phase 79, and the 3-way valve is energized during operation. | X | X | X |
| **Params & Display>** BurnerControl> Configuration> ConfigFlameDet | ReacExtranLight (S) | Startblock | Startblock<br>Lockout | If the extraneous light test is activated (see next parameter), this setting determines the response to extraneous light.<br>1) Startblock - will not permit a start of the lightoff sequence.<br>2) Lockout - lockout in response to extraneous light. | X | X | X |
| | ExtranLightTest (O) | activated | activated<br>deactivated | Activates or deactivates the extraneous light check during the start sequence and during standby. NOTE : This setting is intended to be used with applications such as waste incinerators. DO NOT deactivate for boiler burners. | | | |
| | ReacTmeLossFlame (O) | 0.2s | 0.2-3.2s | Sets the flame failure reaction time. The LMV5 has a base flame failure reaction time of approximately 0.8 seconds, so the setting of this parameter will add to the base flame failure reaction time. Max total flame failure reaction time is 4 sec. | | | |

| **LEGEND -** Password Access: (U)=User, (S)=Service, (O)=OEM, Shaded = Commonly Used, ** = Must Set, X = Has Function, / = Partial Function | | | | | **LMV** | | |
|---|---|---|---|---|---|---|---|
| **Menu Path** | **Parameter** | **Default** | **Range** | **Description** | 51.1 | 52.2 | 52.4 |
| **Params & Display>** BurnerControl> Configuration> ConfigFlameDet> FlameSignal | Standardize (O) | Go into parameter then press Enter to start | | Sets a datum for a "normal" flame, so that a "normal" flame can be displayed as 100% flame signal on the OperationalStat screen. If an 82.3% flame is present and the flame standardization is performed, what was displayed as 82.3% is now displayed as 100%. This parameter does not affect when a lockout occurs due to low flame signal. This standarization is performed when a normal flame exists in the burner. | X | X | X |
| | StandardFactor (O) | XXXX% (Not Set) | 0-100% | Can be viewed to see what percent raw flame signal will result in 100% flame signal being displayed on the OperationalStat screen. If the flame signal is not standardized, XXXX % will appear, indicating actual flame strength is displayed. | | | |
| | FlameSig QRI_B (U) | Read Only | | This can be viewed to see the raw flame signal (in %) from the flame scanner (IR or UV). Flame failure at 20%. This signal refers to INPUT terminal X10-02.1 or X10-02.2. | | | |
| | FlameSig ION (U) | Read Only | | This can be viewed to see what raw flame signal (in %) is being sent to the LMV5 by an ionization probe (flame rod) on terminal X10-03.1. The LMV5 will alarm when this value is less than about 20%. | | | |
| NOTE: On an LMV52, it is recommended to set the following six flame scanner parameters for "1 Sensor". These parameters are unavailable on an LMV51. | | | | | | | |
| **Params & Display>** BurnerControl> Configuration> ConfigFlameDet | SensExtranlGas (O) | 1 Sensor | See Description | For the LMV52, this defines how the combustion chamber will be supervised during the period when the fuel valves are closed (gas firing).<br>The choices for supervision during this phase are as follows:<br>1) 1 Sensor: Either a flame rod (ION) or scanner can be connected and used. Both cannot be connected.<br>2) QRI_B \| ION: Both sensors can be connected. A flame signal on either will cause a signal to be registered.<br>3) QRI_B & /ION: Both sensors can be connected. Flame must be detected by QRI_B and not ION.<br>4) QRI_B: Both sensors can be connected. Only QRI_B is used.<br>5) ION &/QRI_B: Both sensors can be connected. Flame must be detected by ION and not QRI_B.<br>6) ION: Both sensors can be connected. Only ION is used. | | X | X |
| | SensPilotPhGas (O) | 1 Sensor | See Above | For the LMV52, this defines how the pilot for gas firing is supervised. Options 1 thru 6 as described in parameter ***SenExtranlGas*** also apply to this parameter. Additionally, there is one option added for this parameter. This option is:<br>7) QRI_B & ION: Both sensors can be connected. Both sensors must detect a flame at the same time or a flame failure will occur. | | X | X |
| | SensOperPhGas (O) | 1 Sensor | See Above | For the LMV52, this defines how the main flame for gas firing is supervised. Options 1 thru 7 as described in parameters ***SensExtranlGas*** and ***SensPilotPhGas*** also apply to this parameter. | | X | X |

| **LEGEND -** Password Access: (U)=User, (S)=Service, (O)=OEM, Shaded = Commonly Used, ** = Must Set, X = Has Function, / = Partial Function | | | | | **LMV** | | |
|---|---|---|---|---|---|---|---|
| **Menu Path** | **Parameter** | **Default** | **Range** | **Description** | 51.1 | 52.2 | 52.4 |
| **Params & Display>** BurnerControl> Configuration> ConfigFlameDet | SensExtranlOil (O) | 1 Sensor | See Above | For the LMV52, this defines how the combustion chamber will be supervised during the period when the fuel valves are closed (oil firing). Options 1 thru 6 as described in parameter ***SensExtranlGas*** apply to this parameter. | | X | X |
| | SensPilotPhOil (O) | 1 Sensor | See Above | For the LMV52, this defines how the pilot for oil firing is supervised. Options 1 thru 7 as described in parameters ***SensExtranlGas*** and ***SensPilotPhGas*** also apply to this parameter. | | X | X |
| | SensOperPhOil (O) | 1 Sensor | See Above | For the LMV52, this defines how the main flame for oil firing is supervised. Options 1 thru 7 as described in parameters ***SensExtranlGas*** and ***SensPilotPhGas*** also apply to this parameter. | | X | X |
| **Params & Display**> BurnerControl> Configuration> RepetitCounter | LossOfFlame (S) | 1 | 1-2 | Sets the number of times a flame failure is required to cause a lockout. Most US codes require 1. | X | X | X |
| | HeavyOil (S) | 1 | 1-16 | Sets how many times the LMV5 will attempt to proceed past phase 21 if a start release for heavy oil is not met on INPUT X6-01.3. After this number of tries a lockout will occur. A setting of 16 indicates unlimited repetitions. | X | X | X |
| | StartRelease (S) | 1 | 1-16 | Sets how many times the LMV5 will attempt to proceed past phase 21 if a start release is not met, such as low gas pressure on INPUT terminal X9-03.4. After this number of tries, a lockout will occur. A setting of 16 indicates unlimited repetitions. | X | X | X |
| | SafetyLoop (S) | 1 | 1-16 | Sets how many times the LMV5 will attempt to restart without manual reset when the safety loop is opened. This parameter should always be set to 1. A setting of 16 indicates unlimited repetitions. | X | X | X |
| **Params & Display>** BurnerControl> ValveProving | ValveProvingType (O) | No VP | No VP<br>VP startup<br>VP shutdown<br>VP stup/shd | This determines if gas valve proving (leak testing) will be performed. Gas valve proving can be performed on startup, shutdown, or both. If 'No VP' is selected, valve proving will not be performed. If 'No VP' is selected, and parameter ***Config_PS-VP/CPI*** is set to PS-VP, then INPUT X9-03.2 is essentially deactivated. | X | X | X |
| | Config_PS-VP/CPI (O) | PS-VP | PS-VP<br>CPI Gas<br>CPI Gas+Oil CPI Oil | Sets the function of INPUT X9-03.2. Functions: PS-VP (Pressure Switch - Valve Proving) for use with automatic valve proving, proof of closure (POC) for gas valves, POC for oil valves, or POC for gas and oil valves. Note: POC and CPI (Closed Position Indication) are the same function. Input can be deactivated by setting to PS-VP and de-activating valve proving. The same parameter is also available under : *Params & Display > BurnerControl > Configuration* | X | X | X |
| | VP_EvacTme (O) | 3s | 0.2-10s | If valve proving is activated, this specifies the time that the downstream valve (V2) is energized, OUTPUT X9-01.3. This will evacuate any gas that might exist between the gas valves. Note: If gas valve proving is used, opening times of the gas valves must be less than the maximum value for this parameter. | X | X | X |

| **LEGEND -** Password Access: (U)=User, (S)=Service, (O)=OEM, Shaded = Commonly Used, ** = Must Set, X = Has Function, / = Partial Function | | | | | **LMV** | | |
|---|---|---|---|---|---|---|---|
| **Menu Path** | **Parameter** | **Default** | **Range** | **Description** | 51.1 | 52.2 | 52.4 |
| **Params & Display>** BurnerControl> ValveProving | VP_TmeAtmPress (O) | 10s | 0.2s-63min | If valve proving is activated, this is the time that both the upstream and downstream valves are closed. If the pressure rises between the valves during this period (enough to open the N.C. pressure switch), then the upstream valve is leaking and the LMV5 will lockout. A longer time period will produce a more sensitive test. | X | X | X |
| | VP_FillTme (O) | 3s | 0.2-10s | If valve proving is activated, this specifies the time that the upstream valve (V1) is energized, OUTPUT X9-01.4. This will fill the volume between the main gas valves to line pressure. Note: If gas valve proving is to be used, opening times of the gas valves must be less than the maximum value for this parameter. | X | X | X |
| | VP_Tme_GasPress (O) | 10s | 0.2s-63min | If valve proving is activated, this is the time that both the upstream and downstream valves are closed. If the pressure falls between the valves during this period (enough to close the N.C. pressure switch), then the downstream valve is leaking and the LMV5 will lockout. A longer time period will produce a more sensitive test. | X | X | X |
| **Params & Display>** BurnerControl> ProductID | ASN (U) | Read Only | | Product version identification. | X | X | X |
| | ProductionDate (U) | Read Only | | Date LMV5 unit was produced. | X | X | X |
| | SerialNumber (U) | Read Only | | Serial number of unit. | X | X | X |
| | ParamSet Code (U) | Read Only | | Parameter set code. | X | X | X |
| | ParamSet Vers (U) | Read Only | | Version (revision) of the tagged parameter set. | X | X | X |
| **Params & Display>** BurnerControl | SW Version (U) | Read Only | | LMV5 software version. | X | X | X |
| **Params & Display>** RatioControl> Gas/Oil Settings> SpecialPositions> HomePos | HomePosGas or HomePosOil (S) | 0 deg | 0-90 deg | Sets the home position of the fuel actuator(s). The fuel actuator(s) will also stay in this position during prepurge. Each fuel can have its own setting. Typically set 2 degrees away from closed mechanical stop. | X | X | X |
| | HomePosAir (S) | 0 deg | 0-90 deg | Sets the home position of the air actuator. Each fuel can have its own setting. Typically set 2 degrees away from closed mechanical stop. | X | X | X |
| | HomePosAux1 (S) | 0 deg | 0-90 deg | Sets the home position of the aux1 actuator. Each fuel can have its own setting. Typically set 2 degrees away from closed mechanical stop. | X | X | X |
| | HomePosAux2 (S) | 0 deg | 0-90 deg | Sets the home position of the aux2 actuator. Each fuel can have its own setting. Typically set 2 degrees away from closed mechanical stop. | | X | X |
| | HomePosAux3 (S) | 0 deg | 0-90 deg | Sets the home position of the aux3 actuator. Each fuel can have its own setting. Typically set 2 degrees away from closed mechanical stop. | | X | X |
| | HomePosVSD (S) | 0% | 0-100% | Sets the home speed of the VSD. Each fuel can have its own setting. | | X | X |

| **LEGEND -** Password Access: (U)=User, (S)=Service, (O)=OEM, Shaded = Commonly Used, ** = Must Set, X = Has Function, / = Partial Function | | | | | **LMV** | | |
|---|---|---|---|---|---|---|---|
| **Menu Path** | **Parameter** | **Default** | **Range** | **Description** | 51.1 | 52.2 | 52.4 |
| **Params & Display>** RatioControl> Gas/Oil Settings> SpecialPositions> PrepurgePos | PrepurgePosAir (S) | 90 deg | 0-90 deg | Sets the prepurge position of the air actuator. Be aware of mechancial stops. | X | X | X |
| | PrepurgePosAux1 (S) | 90 deg | 0-90 deg | Sets the prepurge position of the aux1 actuator. Be aware of mechancial stops. | X | X | X |
| | PrepurgePosAux2 (S) | 90 deg | 0-90 deg | Sets the prepurge position of the aux2 actuator. Be aware of mechancial stops. | | X | X |
| | PrepurgePosAux3 (S) | 90 deg | 0-90 deg | Sets the prepurge position of the aux3 actuator. Be aware of mechancial stops. | | X | X |
| | PrepurgePosVSD (S) | 100% | 0-100% | Sets the prepurge speed of the VSD. | | X | X |
| **Params & Display>** RatioControl> Gas/Oil Settings> SpecialPositions> IgnitionPos | IgnitionPosGas or IgnitionPosOil (S)** | Not Set | 0-90 deg | Sets ignition position of the fuel actuator(s). If one fuel actuator is connected to both the gas and oil valve, it can still have independent ignition positions for gas and oil. Setting is independent of low fire. Be aware of mechancial stops. | X | X | X |
| | IgnitionPosAir (S)** | Not Set | 0-90 deg | Sets ignition position of the air actuator. Setting is independent of the low fire position. Be aware of mechancial stops. | X | X | X |
| | IgnitionPosAux1 (S) | Not Set | 0-90 deg | Sets ignition position of the aux1 actuator. Setting is independent of the low fire position. Be aware of mechancial stops. | X | X | X |
| | IgnitionPosAux2 (S) | Not Set | 0-90 deg | Sets ignition position of the aux2 actuator. Setting is independent of the low fire position. Be aware of mechancial stops. | | X | X |
| | IgnitionPosAux3 (S) | Not Set | 0-90 deg | Sets ignition position of the aux3 actuator. Setting is independent of the low fire position. Be aware of mechancial stops. | | X | X |
| | IgnitionPosVSD (S) | Not Set | 0-100% | Sets ignition speed of the VSD. Setting is independent of the low fire position. | | X | X |
| **Params & Display>** RatioControl> Gas/Oil Settings> SpecialPositions> PostpurgePos | PostpurgePosGas or PostpurgePosOil (S) | 15 deg | 0-90 deg | Sets the postpurge position of the fuel actuator(s). Be aware of mechancial stops. | X | X | X |
| | PostpurgePosAir (S) | 15 deg | 0-90 deg | Sets the postpurge position of the air actuator. Be aware of mechancial stops. | X | X | X |
| | PostpurgePosAux1 (S) | 25 deg | 0-90 deg | Sets the postpurge position of the aux1 actuator. Be aware of mechancial stops. | X | X | X |
| | PostpurgePosAux2 (S) | 25 deg | 0-90 deg | Sets the postpurge position of the aux2 actuator. Be aware of mechancial stops. | | X | X |
| | PostpurgePosAux3 (S) | 25 deg | 0-90 deg | Sets the postpurge position of the aux3 actuator. Be aware of mechancial stops. | | X | X |
| | PostpurgePosVSD (S) | 50% | 0-100% | Sets the postpurge speed of the VSD. | | X | X |

| **LEGEND -** Password Access: (U)=User, (S)=Service, (O)=OEM, Shaded = Commonly Used, ** = Must Set, X = Has Function, / = Partial Function | | | | | **LMV** | | |
|---|---|---|---|---|---|---|---|
| **Menu Path** | **Parameter** | **Default** | **Range** | **Description** | 51.1 | 52.2 | 52.4 |
| **Params & Display>** RatioControl> Gas/Oil Settings> SpecialPositions | ProgramStop (S) | deact | See Description | For gas or oil firing, this parameter will stop the sequence in the selected phase. Useful for commissioning and service work. The LMV5 can be held in the following phases: 24 Prepurge, 32 Prepurge FGR, 36 Ignition Position, 44 Interval 1 (pilot stabilize), 52 Interval 2 (main flame stabilize), 72 Postpurge Position, 76 Postpurge FGR. Program Stop can also be deactivated. | X | X | X |
| **Params & Display>** RatioControl> Gas/Oil Settings> SpecialPositions> ResetIgnitPos | IgnitionPosGas or IgnitionPosOil (S) | Go into parameter then press Enter to reset | | Resets the ignition position of the fuel actuator(s) to an invalid value. | X | X | X |
| | IgnitionPosAir (S) | | | Resets the ignition position of the air actuator to an invalid value. | X | X | X |
| | IgnitionPosAux1 (S) | | | Resets the ignition position of the aux1 actuator to an invalid value. | X | X | X |
| | IgnitionPosAux2 (S) | | | Resets the ignition position of the aux2 actuator to an invalid value. | | X | X |
| | IgnitionPosAux3 (S) | | | Resets the ignition position of the aux3 actuator to an invalid value. | | X | X |
| | IgnitionPosVSD (S) | | | Resets the ignition speed of the VSD to an invalid value. | | X | X |
| **Params & Display>** RatioControl> GasSettings> | CurveParams (S)** | Not Set | Points 1-15 | This is where actuator position curves and VSD speed curves are set from low to high fire. These position curves determine the fuel-air ratio for the burner across the firing range. Fifteen points can be set from low to high fire. Typically ten points are set. Colons(:) indicate that the actuator is at the indicated position, (>) indicates the actuator is seeking the indicated position, (#) indicates the aux 3 FGR actuator is being held at position due to an FGR hold. If an O2 sensor is attached and activated (LMV52), the wet O2 value will also be displayed on the screen. | X | X | X |
| **Params & Display>** RatioControl> OilSettings> CurveParams | Curve Settings (S) | Not Set | | When a specific point is selected (point 2 for example), the LMV5 will prompt if the point is to be 'changed' or 'deleted'. If 'change' is selected, then the LMV5 will prompt the user to select 'followed' or 'not followed'. If 'followed' is selected, the LMV5 will drive the actuators / VSD to the point, and then the point can be changed. If 'not followed' is selected, the LMV5 will not drive to the point, but the point can still be changed. NOTE : When 'not followed' is selected, the effect of actuator changes cannot be seen on a combustion analyzer. If 'not followed' is selected, extreme caution must be used. | X | X | X |
| | Operation Mode (O) | Mod-ulating | Modulating Two-stage Three-stage | Operation mode for firing oil. | X | X | X |
| **Params & Display>** RatioControl> Gas/Oil Settings> LoadLimits | MinLoadGas(Oil) (S) | 0% | 0-***MaxLoad Gas(Oil)*** | Sets the low fire load. During normal operation, the burner will not modulate below this point. Set to reflect low fire fuel input. For a 10:1 turndown burner, set at 10%. Maximum setting limited by ***MaxLoadGas(Oil)*** . | X | X | X |
| | MaxLoadGas(Oil) (S) | 100% | ***MinLoadGas (Oil)*** -100% | Sets the high fire load. During normal operation, the burner will not modulate above this point. Minimum setting limited by ***MinLoadGas(Oil)*** . | X | X | X |

| **LEGEND -** Password Access: (U)=User, (S)=Service, (O)=OEM, Shaded = Commonly Used, ** = Must Set, X = Has Function, / = Partial Function | | | | | **LMV** | | |
|---|---|---|---|---|---|---|---|
| **Menu Path** | **Parameter** | **Default** | **Range** | **Description** | 51.1 | 52.2 | 52.4 |
| **Params & Display>**<br>RatioControl><br>Gas/Oil Settings><br>Load mask out | LoadMaskLowLimit (S) | 0% | 0-***LoadMask HighLim*** | These settings allow a masking of a particular load range. This is useful for combustion resonances that occur at a particular load (firing rate). For example: if ***LoadMaskLowLim*** is set to 32% and ***LoadMaskHighLim*** is set to 42%, the LMV5 will modulate from 32% to 42% without stopping. | X | X | X |
| | LoadMaskHighLim (S) | 0% | ***LoadMask LowLimit*** - 100% | | X | X | X |
| **Params & Display>**<br>Ratio Control><br>Gas/Oil Settings | AuxActuator (O) | deact | deactivated<br>damper act<br>VSD active<br>AUX3<br>VSD+Aux3 | Sets the mode of the auxiliary actuator on an LMV51.<br>deactivated - an auxiliary actutor <u>is not</u> being used.<br>damper act - an auxiliary actuator <u>is</u> being used.<br>VSD active - only used on an LMV51.3.<br>AUX3 - only used on an LMV51.3.<br>VSD+Aux3 - only used on an LMV51.3. | / | | |
| | AirActuator (O) | air influen | activated<br>deactivated<br>air influen | Actuators or VSD can be activated, deactivated, or set to air Influenced seperately for each fuel, thus each fuel can have a different setting. The air influenced setting is used to designate which actuators (VSD) will be trimmed if O2 trim is used. The air influenced option is only available on LMV52 for actuators other than the fuel actuator(s). Parameter ***GasActuator*** or ***OilActuator*** will appear based upon which fuel is selected at the time of parameter setting. If an actuator is set to air influenced or activated and is not connected to the LMV5 and addressed, a lockout will occur. | X | X | X |
| | AuxActuator 1 (O) | air influen | | | | X | X |
| | AuxActuator 2 (O) | deact | | | | X | X |
| | AuxActuator 3 (O) | deact | | | | X | X |
| | VSD (S) | air influen | | | | X | X |
| | GasActuator (O) | activated | activated<br>deactivated | | X | X | X |
| | OilActuator (O) | activated | activated<br>deactivated | | X | X | X |
| | StartPoint Op (S) | 1 | 1-15 | This parameter controls what curve point the LMV5 drives to after main flame ignition. Setting does not affect burner turndown. Typically this is set to low fire (point 1). Some burner designs require a point higher than point 1 after lightoff. Highest possible point is 15 or the highest point that is set. | X | X | X |

| **LEGEND -** Password Access: (U)=User, (S)=Service, (O)=OEM, Shaded = Commonly Used, ** = Must Set, X = Has Function, / = Partial Function | | | | | **LMV** | | |
|---|---|---|---|---|---|---|---|
| **Menu Path** | **Parameter** | **Default** | **Range** | **Description** | 51.1 | 52.2 | 52.4 |
| **Params & Display>** RatioControl | Autom/Manual/Off (U) | Automatic | Automatic Burner off Manual | Three options exist:<br>1) Automatic - Enables the burner allowing it to respond to setpoints and switch on / switch off points.<br>2) Burner off - Manually turn the burner off.<br>3) Manual - Enables the load of the burner to be set with ***SetLoad*** . When in manual, setpoints and switching points are ignored. If terminal X5-03.1 (burner switch) is enabled, it must be energized for the LMV5 to start regardless of parameter setting. | X | X | X |
| **Params & Display>** RatioControl> Times | OperatRampMod (S) | 30s | 30-120s | Controls the speed at which the actuators / VSD will ramp during phase 60-62 (fuel valves open). Higher numbers are slower ramps. Set for slowest actuator.<br>(SQM45 - 10s, SQM48.4 - 30s, SQM9 - 30s, SQM48.6 - 60s) | X | X | X |
| | OperatRampStage (S) | 10s | 10-60s | Controls the speed at which the LMV5 will ramp in multistage operation. | X | X | X |
| | TimeNoFlame (S) | 10s | 10-120s | Controls the speed at which the actuators / VSD will ramp when the fuel valves are closed. Higher numbers are slower ramps. Set for slowest actuator.<br>(SQM45 - 10s, SQM48.4 - 30s, SQM9 - 30s, SQM48.6 - 60s) | X | X | X |
| **Params & Display>** RatioControl | NumFuelActuators (O) | 2 | 1-2 | Setting is avalable so that a single fuel actuator could be used for a gas and oil valve on a common shaft. Also useful if firing 2 gaseous fuels with the same firing rate control valve. | X | X | X |
| | ShutdownBehav (S) | HomePos | HomePos PostpurgeP Unchanged | Controls the position of the actuators / VSD when a lockout occurs. Set to the safest option for the burner. | X | X | X |
| | ProgramStop (S) | deact | See Description | For gas or oil firing, this parameter will stop the sequence in the selected phase. Useful for commissioning and service work.<br>The LMV5 can be held in the following phases: 24 Prepurge, 32 Prepurge FGR, 36 Ignition Position, 44 Interval 1 (pilot stabilize), 52 Interval 2 (main flame stabilize), 72 Postpurge Position, 76 Postpurge FGR. Stop can also be deactivated. | X | X | X |
| | Pos. Tolerance (O) | 0.3°/0.5% | 0.3-1.2°/ 0.5-1.2% | Sets the allowable tolerance on actuator positions and VSD speed. A setting of 0.3°/0.5% means that all actuators must be within +/-0.3° of their required positions, and the VSD must be within +/-0.5% of its required speed. Can be increased from the default values to eliminate nuisance lockouts from a fluttering damper. | X | X | X |

| **LEGEND -** Password Access: (U)=User, (S)=Service, (O)=OEM, Shaded = Commonly Used, ** = Must Set, X = Has Function, / = Partial Function | | | | | **LMV** | | |
|---|---|---|---|---|---|---|---|
| **Menu Path** | **Parameter** | **Default** | **Range** | **Description** | 51.1 | 52.2 | 52.4 |
| **Params & Display>**<br>O2Contr/Alarm><br>Gas/Oil Settings | OptgMode (S) | man deact | man deact<br>O2 Limiter<br>O2 Control<br>conAutoDeac | Four settings are available for each fuel:<br>1) man deact - O2 trim controller AND O2 monitor are de-activated. Burner will run on ratio control curve.<br>2) O2 Limiter - Only the O2 Alarm is activated. Any O2 fault, including low O2 levels in the stack, will cause a burner lockout. O2 Alarm curve must be input for this function.<br>3) O2 Control - O2 trim controller and O2 Alarm are activated. Any O2 fault will cause a burner shutdown. O2 Alarm curve and O2 setpoint curve must be input for this function.<br>4) ConAutoDeac - configured to automatically deactivate the O2 trim controller if any O2 fault occurs. Burner runs on ratio curve when O2 control auto deactivates.<br>NOTE: "auto deact" will appear when the O2 control deactivates itself, due to an operating fault or component malfunction. If the control goes into auto deact, choose O2 Limiter, O2 Control, or ConAutoDeac to re-activate. This can also be reactivated under: *Operation > O2Ctrl activate* . | | X | X |
| **Params & Display>**<br>O2Contr/Alarm><br>Gas/Oil Settings | O2 Control (S) | Not Set | Points 2-15 | This is where the O2 ratio control and the O2 control curves are input. An O2 ratio contol point and O2 control point must be set for every point on the position control curve except for point 1. See Section 6 for more detail. | | X | X |
| **Params & Display>**<br>O2Contr/Alarm><br>Gas/Oil Settings><br>O2 Alarm | O2 Alarm (S) | Not Set | Points 1-15 | This is where the low O2 alarm curve is input. A low O2 alarm point must be set for every point on the position control curve. The position control curves (fuel air ratio curves) must be set before this curve is entered. Points can be set by typing in an O2 value or by probing each point. See Section 6 for more detail. | | X | X |
| | Time O2 Alarm (O) | 3s | 1-60s | The maximum amount of time the measured %O2 is permitted to be higher than ***O2 MaxValue*** or lower than the ***O2 Alarm*** . Essentially a timer to give the LMV5 time to correct an O2 excursion. Set to the highest value that is safe for the application. | | X | X |
| | Type O2 MaxValue (O) | O2Max Value | O2MaxValue<br>O2MaxCurve | Either the O2 ratio control curve (O2MaxCurve) or a single value (defined by ***O2MaxValue*** ) can be used to define the maximum allowable %O2 for a given burner. If set to "O2MaxValue", the value (defined below) is used for all firing rates. | | | X |
| | O2 MaxValue (S) | 15% | 0-15% | Sets the maximum allowable %O2 for a given burner if parameter ***Type O2 MaxValue*** (see above) is set to "O2MaxValue". | | X | X |

| **LEGEND -** Password Access: (U)=User, (S)=Service, (O)=OEM, Shaded = Commonly Used, ** = Must Set, X = Has Function, / = Partial Function | | | | | **LMV** | | |
|---|---|---|---|---|---|---|---|
| **Menu Path** | **Parameter** | **Default** | **Range** | **Description** | 51.1 | 52.2 | 52.4 |
| **Params & Display>**<br>O2Contr/Alarm><br>Gas/Oil Settings><br>O2 Alarm | NumMinUntilDeact (S) | 1 | 1-5 | If the measured %O2 exceeds ***O2 MaxValue*** or goes lower than the ***O2 Alarm*** for a time longer than ***Time O2 Alarm*** (O2 exceedances), then the O2 trim will deactivate. If parameter ***OptgMode*** is set to 'O2 Control' during an exceedance, a lockout will occur. If parameter ***OptgMode*** is set to 'ConAutoDeac' during an exceedance, then the O2 trim will temporarily deactivate (burner keeps running on position control curves). If the measured %O2 comes back between ***O2 MaxValue*** and the ***O2 Alarm*** , then the O2 trim will attempt to reactivate. This parameter determines how many times the O2 trim can deactivate and reactivate. This parameter is valid only if ***OptgMode*** is set to 'ConAutoDeac'. A setting of 1 = no repetitions, a setting of 5 = 4 repetitions. | | X | X |
| **Params & Display>**<br>O2Contr/Alarm><br>Gas/Oil Settings><br>Control Param><br>PI | P Low-Fire (S) | Not Set | 3-500% | Proportional band and integral component for O2 trim response. Automatically set based on the Tau (delay time) measured at the ***LowfireAdaptPtNo*** . Both the P and the I can be manually adjusted, but this is typically not necessary. | | X | X |
| | I Low-Fire (S) | Not Set | 0-500s | | | X | X |
| | Tau Low-Fire OEM (O) | Not Set | 1-60s | ***Tau Low-Fire*** (delay time at low fire) can be manually adjusted here if necessary, but manual adjustment is typically not necessary. | | X | X |
| | Tau Low-Fire (U) | Read Only | | This is the delay time that is automatically measured at ***LowfireAdaptPtNo*** . Delay time is the amount of time that a fuel air ratio change at the burner takes to reach the O2 sensor in the stack. The delay time is shorter at high fire and longer at low fire due to gas velocity through the boiler. | | X | X |
| | P High-Fire (S) | Not Set | 3-500% | Proportional band and integral component for O2 trim response. Automatically set based on the Tau (delay time) measured at high fire (the highest point in the curve). Both the P and the I can be manually adjusted, but this is typically not necessary. | | X | X |
| | I High-Fire (S) | Not Set | 0-500s | | | X | X |
| | Tau High-FireOEM (O) | Not Set | 1-60s | ***Tau High-Fire*** (delay time at high fire) can be manually adjusted here if necessary, but manual adjustment is typically not necessary. | | X | X |
| | Tau High-Fire (U) | Read Only | | This is the delay time that is automatically measured at high fire (the highest point in the curve). See ***Tau Low-Fire*** for explanation. | | X | X |
| | Calc PI again (O) | deact | activated<br>deactivated | If ***Tau High-FireOEM*** or ***Tau Low-FireOEM*** are manually adjusted, then the PI values need to be recalculated based on the new Tau values. Setting this parameter to activated will recalculate the high and low fire PI values. | | X | X |

| **LEGEND -** Password Access: (U)=User, (S)=Service, (O)=OEM, Shaded = Commonly Used, ** = Must Set, X = Has Function, / = Partial Function | | | | | **LMV** | | |
|---|---|---|---|---|---|---|---|
| **Menu Path** | **Parameter** | **Default** | **Range** | **Description** | 51.1 | 52.2 | 52.4 |
| **Params & Display>**<br>O2Contr/Alarm><br>Gas/Oil Settings><br>Control Param | LowfireAdaptPtNo (S)** | Not Set | 2-15 | Sets the point that ***Tau Low-Fire*** is automatically measured. Tau and PI for low fire will be based on this point. A low fire adapt point must be defined before setting up the O2 trim curves. Typically the low fire adapt point is chosen at point 2, but a higher point may be necessary on high-turndown burners and / or oversized stacks. | | X | X |
| | O2 CtrlThreshold (S) | 0% | 0-100% | This is the minimum load for the O2 trim. If the load drops below this value, the O2 trim automatically de-activates. 5% above this load setting the O2 trim control will automatically reactivate. Typically set to the same load value as the load at LowfireAdaptPtNo. | | X | X |
| | LoadCtrlSuspend (S) | 5% | 0-25% | During a load change, the O2 trim will lock and will not actively trim. This is necessary due to delay time thru the boiler and also different O2 trim setpoints from low fire to high fire. When locked and not actively trimming, the O2 trim runs on precontrol, meaning that it calculates where to position the air influenced actuators based on burner characteristics learned by the LMV5 during O2 commissioning. This parameter determines how much of a load change will lock the O2 trim and cause it to run on precontrol. | | X | X |
| | O2ModOffset (S) | 0% | 0-5% | During a load change, this offset temporarily increases the air related load (opens the air influenced actuators). The amount of load change that will trigger ***O2ModOffset*** is determined by the setting of ***LoadCtrlSuspend*** . How much the air related load is increased is determined by the setting of this parameter. A setting of 1% should translate into a 1% increase in measured %O2 during a load change. After active trim is resumed, the offset will be dissolved. | | X | X |
| | O2TrimBehavior (O) | ForcdAir-Add | ForcdAirAdd<br>ForcdAirRed<br>symmetric | Sets the behavior of the O2 trim when active (not locked). This setting only applies if ***StartMode*** is set to standard. Three possibilities exist:<br>1) ForcedAirAdd - O2 trim will add air faster than it will subtract air. Used when the O2 setpoint is close to the ***O2 Alarm*** .<br>2) ForcedAirRed - O2 trim will subtract air faster than it will add air. Used when the O2 setpoint is close to ***O2 MaxValue*** .<br>3) Symmetric - O2 trim will add and subtract air at the same rate. Used when the O2 setpoint is approximately midway between the ***O2 Alarm*** and ***O2 MaxValue*** . | | X | X |

| **LEGEND -** Password Access: (U)=User, (S)=Service, (O)=OEM, Shaded = Commonly Used, ** = Must Set, X = Has Function, / = Partial Function | | | | | **LMV** | | |
|---|---|---|---|---|---|---|---|
| **Menu Path** | **Parameter** | **Default** | **Range** | **Description** | 51.1 | 52.2 | 52.4 |
| **Params & Display>**<br>O2Contr/Alarm>**<br>Gas/Oil Settings>**<br>Control Param | Type Air Change (S) | like theory | like theory<br>like P air<br>LambdaFact1 | Influences the behavior of the O2 precontrol (see ***LoadCtrlSuspend*** ). Setting is determined by whether or not a change in air flow (air pressure in the burner head) impacts the fuel flow. Three possibilites exist:<br>1) like theory - a change in air flow (pressure) does not impact fuel flow.<br>2) like P air - a change in air flow (pressure) does impact fuel flow.<br>3) LambdaFact1 - ignores the learned value and assumes a Lambda factor of 1. This setting is not recommended for most burners. Both 'like theory' and 'like P air' use the Lambda factors learned at each point during O2 control curve commissioning, which is preferred.<br>NOTE: 'like theory' is typical for oil, and 'like P air' is typical for gas.<br>NOTE: The burner behavior discussed above can only be observed if a fuel flow meter is used during commissioning. | | X | X |
| | O2MaxManVariable (S) | 35% | 1-50% | These settings limit the amount of positive or negative O2 trim that can take place by limiting how much the manipulated variable can be changed. O2MaxManVariable limits how much the air damper can trim open. O2MinManVariable limits how much the air damper can trim closed. These limits must be set so that they are not reached during normal operation with normal variances in ambient conditions. However, they also must be set so that when the limits are reached, an unsafe condition does not occur with the burner. Reaching these limits will cause a deactivation of the O2 trim or lockout depending upon how parameter ***OptgMode*** is set. See Section 6 for more detail. | | X | X |
| | O2MinManVariable (S) | -35% | -50-0% | | | X | X |

| **LEGEND -** Password Access: (U)=User, (S)=Service, (O)=OEM, Shaded = Commonly Used, ** = Must Set, X = Has Function, / = Partial Function | | | | | **LMV** | | |
|---|---|---|---|---|---|---|---|
| **Menu Path** | **Parameter** | **Default** | **Range** | **Description** | 51.1 | 52.2 | 52.4 |
| **Params & Display>**<br>O2Contr/Alarm><br>Gas/Oil Settings ><br>Startmode | Startmode (O) | standard | standard<br>Ign Load TC<br>IgnPtWithTC<br>IgnPtWoutTC | Sets how the LMV52.4 transitions from lightoff to operation. Four possibilities exist:<br>1) standard - after lightoff at set ignition positions, LMV5 is immediately released to modulate on the position control (fuel air ratio) curves. O2 trim will engage after a period of time defined by (***Tau Low-Fire*** x ***NumberTauSuspend*** ) plus an additional 4x ***Tau Low-Fire*** . This is how past LMV52s have functioned.<br>2) Ign Load TC - does not use set ignition positions. Varies ignition positions based on ambient temperature and the setting of parameter ***Load of Ignition*** .<br>3) IgnPtWithTC - uses set ignition positions, but will vary the positions of the air influenced actuators when transitioning from lightoff to low fire based on ambient temperature.<br>4) IgnPtWoutTC - uses set ignition positions, and will vary the positions of the air influenced actuators when transitioning to low fire based on learned characteristics of the burner.<br>NOTE: Start modes other than standard will all hold the LMV5 at ***StartPointOp*** (low fire) until a time defined by (***Tau Low-Fire*** x ***NumberTauSuspend*** ) has passed, or the measured %O2 is within +/- 0.2% of setpoint. See Section 6 for more detail. | | | x |
| | Load of Ignition (O) | 0% | 0-100% | When ***Startmode*** is set to "IgnLoadTC", this defines the load at which the burner will be ignited. If another start mode is selected, parameter has no effect. | | | x |
| | O2InitOffset (O) | 0% | -2-2% | For start modes other than standard, this will bias the manipulated variable so that the transition from lightoff to lowfire can be more rich (negative values) or more lean (positive values). Offset is in %O2, even 1% gives a substantial offset. Can also be used to shorten the release to modulation time (by bringing down the measured %O2 to +/- 0.2% faster) for start modes other than standard. | | | x |
| | NumberTauSuspend (S) | 10 | 5-140 | After burner ignition, the air inside the boiler and stack is slowly replaced with the products of combustion. Only after this replacement is complete can accurate, representative O2 readings be taken by the O2 sensor. This also determines the low fire waiting time if the ***Startmode*** is not set to "standard". The value of ***NumberTauSuspend*** multiplied by ***Tau Low-Fire*** determines the time at which representative O2 readings can be taken by the O2 sensor mounted in the stack. | | | x |
| | Adjust. Temp O2 (U) | Read Only | | Temperature as read by the ambient air temperature sensor when the last point of the O2 control curve was commissioned. Used as the basis for the temperature for the compensated (TC) start modes. | | | x |

| **LEGEND -** Password Access: (U)=User, (S)=Service, (O)=OEM, Shaded = Commonly Used, ** = Must Set, X = Has Function, / = Partial Function | | | | | **LMV** | | |
|---|---|---|---|---|---|---|---|
| **Menu Path** | **Parameter** | **Default** | **Range** | **Description** | 51.1 | 52.2 | 52.4 |
| **Params & Display>** O2Contr/Alarm> Gas/Oil Settings | Type of Fuel (S) | natural GasH | user def naturalGasH naturalGasL propane butane | This enables the user to pick what type of fuel will be burnt with the O2 Control / O2 Alarm when firing gas. Options : User defined (see below), naturalgasH (at or above 960 Btu/SCF), naturalgasL (below 960 Btu/SCF), propane, butane. | | X | X |
| | | oil EL | user def oil EL Oil H | This enables the user to pick what type of fuel will be burnt with the O2 Control / O2 Alarm when firing oil. Options : User defined (see below), Oil EL (Light oil #2), Oil H (Heavy oil #6) | | X | X |
| **Params & Display>** O2Contr/Alarm> Gas/Oil Settings> Fuel user-def | V_LNmin (Gas) (S) | 9.9 | 0-40 | For user-defined fuels, this represents the volumetric fuel / air ratio needed for stoichiometric combustion of the fuel. | | X | X |
| | V_Lnmin (Oil) (S) | 11.2 | | | | X | X |
| | V_afNmin (Gas) (S) | 10.93 | 0-40 | For user defined fuels, this represents the quantity of flue gas generated (wet basis) when either one cubic meter (for gases) or one kg (for oil) of fuel is combusted at stoichiometric conditions. | | X | X |
| | V_afNmin (Oil) (S) | 12.02 | | | | X | X |
| | V_atrNmin (Gas) (S) | 8.89 | 0-40 | For user defined fuels, this represents the quantity of flue gas generated (dry basis) when either one cubic meter (for gases) or one kg (for oil) of fuel is combusted at stoichiometric conditions. | | X | X |
| | V_atrNmin (Oil) (S) | 10.53 | | | | X | X |
| | A2 (S) | 0.65 | 0.40-0.80 | For user defined fuels, these values are adjustable constants for calculating the combustion efficiency when firing gas or oil. | | X | X |
| | B/1000 (S) | 9 | 1-20 | | | X | X |
| **Params & Display**> O2Contr/Alarm> Gas/Oil Settings | O2 Content Air (O) | 20.9% | 0-30% | Defines the O2 content of the combustion air. The LMV52 must see this value +/- 2% during prepurge. This value can be adjusted if O2 enriched air is used. | | X | X |
| **Params & Display**> O2Contr/Alarm> COx | OptgMode COx Gas (S) | deact | deactivated COx Control COx Limiter | Future functionality. Does nothing at this time. | | | X |
| | OptgMode COx Oil (S) | deact | | | | | X |
| | Time COx Alarm (S) | 0s | 0-600s | | | | X |

| **LEGEND -** Password Access: (U)=User, (S)=Service, (O)=OEM, Shaded = Commonly Used, ** = Must Set, X = Has Function, / = Partial Function | | | | | **LMV** | | |
|---|---|---|---|---|---|---|---|
| **Menu Path** | **Parameter** | **Default** | **Range** | **Description** | 51.1 | 52.2 | 52.4 |
| **Params & Display>**<br>O2Contr/Alarm><br>Process Data | CombEfficiency (U) | Read Only | | Calculated combustion efficiency, based on wet O2 levels in the stack, combustion air temperature, and flue gas temperature. | | X | X |
| | ManVar O2 Ctrl (U) | Read Only | | This value represents how much the O2 control is trimming. Values less than 50% indicate that the air-influenced actuators are farther closed than when the O2 was commissioned. Values greater than 50% indicate that the air-influenced actuators are farther open than when the O2 was commissioned. When air temperature decreases (and air density increases), this value should decrease. Conversely, when air temperature increases (and air density decreases), this value should increase. | | X | X |
| | State O2 Ctrl (U) | Read Only | | This displays the status of the O2 trim control.<br>1) deactivated - O2 trim is manually or automatically deactivated. System operates on ratio control curve.<br>2) locked - the manipulated variable (amount of trim) is held at the last value.<br>3) LockTStart - trim is waiting to engage after lightoff. See ***NumberTauSuspend*** .<br>4) InitContr - controller is being initialized (preparing to trim) and is still locked.<br>5) LockTLoad - the O2 trim is engaged but locked due to a load change. See parameter ***LoadControlSuspend*** .<br>6) active - the O2 trim is active and adjusting the air rate in small steps to achieve the O2 setpoint.<br>7) LockTCAct - the O2 trim is engaged but locked due to an excursion from O2 setpoint. | | X | X |
| | Air-related Load (U) | Read Only | | This is the load-position of the air influenced actuators. If this number is less than the fuel related load at a given point, the air influenced actuators are trimming closed. If greater, than the air influenced actuators are trimming open. | | X | X |
| | Diag Reg State (U) | Read Only | | If ***State O2 Ctrl*** reads "locked", this diagnostic code reveals other information. These diagnostic codes are:<br>0 = load is below load limit set in parameter ***O2 CtrlThreshold*** .<br>1 = the load controller is in auto-tune or in manual mode.<br>2 = the O2 sensor is being tested for response (the LMV5 does this periodically during operation).<br>3 = the fuel air ratio curves or the O2 trim curves are being programmed.<br>4 = the measured %O2 is below the %O2 set in the Low O2 Alarm curve.<br>5 = error in the PLL52 module.<br>6 = error in the precontrol. | | X | X |

| **LEGEND -** Password Access: (U)=User, (S)=Service, (O)=OEM, Shaded = Commonly Used, ** = Must Set, X = Has Function, / = Partial Function | | | | | **LMV** | | |
|---|---|---|---|---|---|---|---|
| **Menu Path** | **Parameter** | **Default** | **Range** | **Description** | 51.1 | 52.2 | 52.4 |
| NOTE: For most applications, PID values should be tuned so that the load value does not change more than once every 10 seconds and the actual value trends within 5% of the setpoint. | | | | | | | |
| **Params & Display>** LoadController> ControllerParam> ContrlParamList | StandardParam (U) | Not Set | Adaption<br>very slow<br>slow<br>normal<br>fast<br>very fast | These are preset combinations of values for the for the internal load controller PID loop. Adaption (autotune) is not performed with this parameter, but values found by adaption can be used by selecting 'Adaption'. Options are:<br>Adaption: Values set and recorded here when adaption is performed<br>very slow: P = 3.4 % I = 273 s D = 48 s<br>slow: P = 4.7 % I = 250 s D = 44 s<br>normal: P = 6.4 % I = 136 s D = 24 s<br>fast: P = 14.5 % I = 77 s D = 14 s<br>very fast: P = 42.5 % I = 68 s D = 12 s<br>default: P = 14.5 % I = 120 s D = 0 s<br>The labels above refer to the response of the system (boiler, piping, loads) and not to the LMV5 itself. Very slow gives the largest change in firing rate for a given pressure / temperature change and is typically used on very large systems. Very fast gives the smallest change in firing rate for a given pressure / temperature change. The default values work well with most steam boilers. | X | X | X |
| | P-Part (U) | 14.5% | 2-500% | P part of the PID loop. P is a type of proportional band around the setpoint, and the units are percent. This % is based on 14.5 PSIG or 212 F, depending upon if the LMV5 is set for pressure or temperature. Low values (2%) give an aggressive response and higher values (100%) give a weak response. Setting this parameter too aggressively will cause the load (firing rate) to hunt. | X | X | X |
| | I-Part (U) | 120s | 0-2000s | I part of the PID loop. I is the integral (reset) function. This component serves to eliminate steady state error by looking at the accumulation of error over a period of time and correcting for it. Low values (1s) give an aggressive response and higher values (1000s) give a weak response. Setting this parameter too aggressively will cause overshoot of the setpoint. Setting to 0 is not recommended for most applications since P and I are designed to work together. | X | X | X |
| | D-Part (U) | 0s | 0-1000s | D part of the PID loop. D is the derivative function. This component serves to eliminate overshoot caused by the integral value, and also dampen the action of the P and I values. Low values (1s) give a weak response and higher values (1000s) give an aggressive response. Setting this parameter too aggressively will cause the load (firing rate) to hunt. Setting to 0 or to small values (10) works well for many steam boiler applications. | X | X | X |

| **LEGEND -** Password Access: (U)=User, (S)=Service, (O)=OEM, Shaded = Commonly Used, ** = Must Set, X = Has Function, / = Partial Function | | | | | **LMV** | | |
|---|---|---|---|---|---|---|---|
| **Menu Path** | **Parameter** | **Default** | **Range** | **Description** | 51.1 | 52.2 | 52.4 |
| **Params & Display>** LoadController> ControllerParam | MinActuatorStep (U) | 1% | 0.5-10% | This serves as a deadband on the output of the PID loop to eliminate hunting due to small load changes. If the PID loop requires a load change less than the setting of this parameter, the load will not change. Settings of 5% or above may be counterproductive, not permitting the boiler to closely match the load which may also cause hunting. | X | X | X |
| | SW_FilterTmeCon (U) | 3s | 1-10s | This dampens the pressure or temperature that the LMV5 is reading. Higher values increase the damping and will steady small oscillations in the reading. | X | X | X |
| | SetpointW1 (U) | 0 | Sensor Range | W1 is the primary setpoint of the boiler, in units of temperature or pressure depending on the sensor attached to the LMV5. Setpoint is changed via the AZL52.<br>Also access at: *Operation > BoilerSetpoint* . | X | X | X |
| | SetpointW2 (U) | 0 | Sensor Range | W2 is a secondary setpoint of the boiler, in units of temperature or pressure depending on the sensor attached to the LMV5.<br>Also access at: *Operation > BoilerSetpoint* .<br>If the LMV5 is in internal load controller mode 2 (IntLC), the setpoint can be switched to W2 (from W1) by closing a contact between X62.1 and X62.2. | X | X | X |
| | SD_ModOn (U) | 1% | -50-50% | Determines what temp. / press. a modulating burner will cycle on when LMV5 is in any internal load controller mode. Ignored in external load controller modes.<br>Can be set at a positive or negative %, either above or below the current setpoint respectively. Percentage based on current setpoint. | X | X | X |
| | SD_ModOff (U) | 10% | 0-50% | Determines what temp. / press. a modulating burner will cycle off when LMV5 is in any internal load controller mode. Ignored in external load controller modes.<br>Can be set at a positive or negative %, either above or below the current setpoint respectively. Percentage based on current setpoint. | X | X | X |
| | SD_Stage1On (U) | -2% | -50-50% | Determines what temp. / press. a staged oil burner will engage stage 1.<br>Set at a negative %, so that the burner will turn on stage 1 at a set % below the current setpoint. Percentage based on current setpoint. | X | X | X |
| | SD_Stage1Off (U) | 10% | 0-50% | Determines what temp. / press. a staged oil burner will disengage stage 1.<br>Set at a positive % so that the burner will turn off stage 1 oil at a set % above the current setpoint. Percentage based on current setpoint. | X | X | X |
| | SD_Stage2Off (U) | 8% | 0-50% | Determines what temp. / press. a staged oil burner will disengage stage 2. Set at a positive % so that the boiler will turn off stage 2 oil at a set % above the current setpoint. Percentage based on current setpoint. | X | X | X |

| **LEGEND -** Password Access: (U)=User, (S)=Service, (O)=OEM, Shaded = Commonly Used, ** = Must Set, X = Has Function, / = Partial Function | | | | | **LMV** | | |
|---|---|---|---|---|---|---|---|
| **Menu Path** | **Parameter** | **Default** | **Range** | **Description** | 51.1 | 52.2 | 52.4 |
| **Params & Display>** LoadController> ControllerParam | SD_Stage3Off (U) | 6% | 0-50% | Determines what temp. / press. a staged oil burner will disengage stage 3. Set at a positive % so that the boiler will turn off stage 3 oil at a set % above the current setpoint. Percentage based on current setpoint. | X | X | X |
| | ThreshStage2On (U) | 300 | 0-1000 | This value is the integral of a control deviation multiplied by time. This serves to not call on stage 2 unless the pressure / temperature deviates from the desired setpoint for a length of time and/or by a large margin. | X | X | X |
| | ThreshStage3On (U) | 600 | 0-1000 | This value is the integral of a control deviation multiplied by time. This serves to not call on stage 3 unless the pressure / temperature deviates from the desired setpoint for a length of time and/or by a large margin. | X | X | X |
| **Params & Display>** LoadController> TempLimiter | TL_ThreshOff (S) | 203 F | 32-3632 F | Temperature limiter function. If a temperature sensor is used (connected to INPUT X60), this parameter controls at what temperature the burner goes into alarm and shuts down due to an over-temperature situation. The LMV5 locks out. The LMV5 can only be reset when the temperature goes below ***TL_SD_On*** . Not applicable for steam boilers. | X | X | X |
| | TL_SD_On (S) | -5% | -50-0% | Creates a negative deadband for the temperature limiter function. If the temperature reaches the threshold off value (***TL_ThreshOff***), the burner will shut off with an alarm. This setting controls what temperature under the threshold off value the burner can be restarted. Not applicable to steam boilers. | X | X | X |
| **Params & Display>** LoadController> ColdStart | ColdStartOn (S) | deact | activated deactivated | Activates or deactivates cold start thermal shock protection (low fire hold), based on temp. or press. for a steam boiler, and temp. for a hot water boiler. | X | X | X |
| | ThresholdOn (S) | 20% | 0-100% | This is the temp. / press. below which cold start will engage. Above this temp. /press. the cold start will not engage. The value is a percentage of the current setpoint. | X | X | X |
| | StageLoad (S) | 15% | 0-100% | This sets the % load of the "load step" for a stepping cold start. If the burner is to be held at low fire (low fire hold) until the ***ThresholdOff*** value is reached, set at 0%. | X | X | X |
| | StageSetp_Mod (S) | 5% | 1-100% | For modulating burners, this is how much the temp. / press. must increase before the next load step is triggered. This is a percentage of the current setpoint. Can be set to 100% if a burner is to be stepped by time only. | X | X | X |
| | StageSetp_Stage (S) | 5% | 1-100% | For staged burners, this is how much the temp. / press. must increase before the next burner stage is released. This is a percentage of the current setpoint. Can be set to 100% if a burner is to be stepped by time only. | X | X | X |

| **LEGEND -** Password Access: (U)=User, (S)=Service, (O)=OEM, Shaded = Commonly Used, ** = Must Set, X = Has Function, / = Partial Function | | | | | **LMV** | | |
|---|---|---|---|---|---|---|---|
| **Menu Path** | **Parameter** | **Default** | **Range** | **Description** | 51.1 | 52.2 | 52.4 |
| **Params & Display>** LoadController> ColdStart | MaxTmeMod (S) | 3min | 1-63min | For modulating burners, this is the maximum allowable time for each load step. If the temp. / press. does not increase enough to trigger the next load step before this time expires, the next load step will be taken based on this time. Set to 63 min if to be ramped on temp. / press. only. | X | X | X |
| | MaxTmeStage (S) | 3min | 1-63min | For staged oil burners, this is the maximum allowable time for each stage step. If the temp. / press. does not increase enough to trigger the next stage before this time expires, the next stage will be engaged based on this time. Set to 63 min if to be ramped on temp. / press. only. | X | X | X |
| | ThresholdOff (S) | 80% | 0-100% | If ***ColdStartOn*** is activated, this is the temp. / press. where the thermal shock protection disengages. The value is a percentage of the current setpoint. | X | X | X |
| | AdditionalSens (S) | deact | deactivated<br>Pt100<br>Pt1000<br>Ni1000 | If an additional temp sensor is used on a steam boiler for cold start (recommended), the type of sensor must be selected. Sensor to be wired to INPUT terminal X60. Pt1000 and Ni1000 temperature is updated continuously, PT100 temperature only updated when thermal shock protection is active. | X | X | X |
| | Temp. ColdStart (U) | Read Only | | Displays the temperature being read by the additional sensor. For Pt100 sensor, this is only valid when thermal shock protection is active. | X | X | X |
| | Setp AddSensor (S) | 140 F | 32-842 F | If a temperature sensor is used on a steam boiler for cold start, a temperature setpoint must be selected to take the place of the current setpoint. ***ThresholdOn*** , ***ThresholdOff*** , ***StageSetp_Mod*** , and ***StageSetp_Stage*** percentages will be based on this value. Not applicable to hot water boilers. | X | X | X |
| | Release Stages (S) | release | release<br>no release | For staged burners, this enables or disables stages (other than the first stage) to be released during a cold start. | X | X | X |

| **LEGEND -** Password Access: (U)=User, (S)=Service, (O)=OEM, Shaded = Commonly Used, ** = Must Set, X = Has Function, / = Partial Function | | | | | **LMV** | | |
|---|---|---|---|---|---|---|---|
| **Menu Path** | **Parameter** | **Default** | **Range** | **Description** | 51.1 | 52.2 | 52.4 |
| **Params & Display>** LoadController> Configuration | LC_OptgMode (U) | IntLC | ExtLC X5-03<br>IntLC<br>IntLC Bus<br>IntLC X62<br>ExtLC X62<br>ExtLC Bus | Sets the load controller operating mode of the LMV5.<br>1) External load controller X5-03 (ExtLC X5-03) - use with a floating bumping type of universal controller on X5-03 pins 2 and 3. Parameters ***SD_ModOn*** and ***SD_ModOff*** ignored.<br>2) Internal load controller (IntLC) - use with a directly connected pressure or temperature sensor. Setpoint W1 is normally used with this mode.<br>3) Internal load controller Bus (IntLC Bus) - same as 2 except setpoint W3 can be changed via Modbus connection.<br>4) Internal load controller X62 (IntLC X62) - same as 2 except setpoint can be changed by using an external analog signal on terminal X62.<br>5) External load controller X62 (ExtLC X62) - direct firing rate control analog signal on terminal X62. Pressure / temperature sensors ignored. Parameters ***SD_ModOn*** and ***SD_ModOff*** ignored.<br>6) External load controller Bus (ExtLC Bus) - direct firing rate control via Modbus connection. Pressure / temperature sensors ignored. Parameters ***SD_ModOn*** and ***SD_ModOff*** ignored.<br>NOTE: If "Load Controller not active" is displayed, go to: *SystemConfig > LC_OptgMode* .<br>NOTE: Modes 1 and 3 thru 6 can be switched back to mode 2 by closing a contact between X62.1 and X62.2. When in mode 2, contact closure can be used to switch between setpoint W1 and W2. | X | X | X |
| | Sensor Select (S) | Pt100 | Pt100<br>Pt1000<br>Ni1000<br>TempSensor<br>PressSensor<br>Pt100Pt1000<br>Pt100Ni1000<br>NoSensor | Defines the type of sensor that will be used for the internal load controller.<br>1) Pt100, Pt1000, Ni1000 - Temperature sensor (RTD) wired to terminal X60. Ni1000 is an LG-Ni1000 sensor.<br>2) TempSensor, PressSensor - Temperature or pressure sensor wired to terminal X61. Can be 0-10VDC, 2-10VDC, 0-20mA or 4-20mA.<br>3) Pt100Pt1000, Pt100Ni1000 - Redundant temperature sensors wired to terminal X60 for hot water boilers. Reduntant temp sensor for temperature limiter. Ni1000 is an LG-Ni1000 sensor.<br>4) NoSensor - Selected if LMV5x is being remotely modulated and no sensor is being used for the load controller or the temperature limiter.<br>NOTE: Temperature limiter is only active for hot water boilers (temperature control). | X | X | X |
| | MeasureRangePtNi (S) | 302 F | 302 F<br>752 F<br>1562 F | Sets the end of measurement range for platinum or LG-nickel temperature sensors (RTDs) connected to terminal X60. Lower settings will detect sensor malfunctions (short circuits) more quickly. Does not affect the scaling (degrees / ohm) for the sensors. Set as low as practical for the application. Also, this serves to scale INPUT X62 if used for remote temperature setpoints. If set for 1562F, remote setpoints are scaled by parameter ***var. RangePtNi*** . | X | X | X |

| **LEGEND -** Password Access: (U)=User, (S)=Service, (O)=OEM, Shaded = Commonly Used, ** = Must Set, X = Has Function, / = Partial Function | | | | | **LMV** | | |
|---|---|---|---|---|---|---|---|
| **Menu Path** | **Parameter** | **Default** | **Range** | **Description** | 51.1 | 52.2 | 52.4 |
| **Params & Display>** LoadController> Configuration | var. RangePtNi (S) | 1562 F | 32-1562 F | When ***MeasureRangePtNi*** is set to 1562F, this scales the high end of INPUT X62 for remote temperature setpoints. | X | X | X |
| | Ext Inp X61 U/I (S) | 0..10 V | 4..20 mA<br>2..10 V<br>0..10 V<br>0..20 mA | Configuration of terminal X61. Can be 0-10VDC, 2-10VDC, 0-20mA or 4-20mA.<br>NOTE : For 4-20mA signals, signal limits are 3mA to 21mA. For 0-10 VDC signals, signal limit is 10.5 VDC. Signals not in this range will cause an alarm. | X | X | X |
| | MRange TempSens (S) | 194 F | 32-3632 F | Sets the end of the scale for a temperature transducer connected to terminal X61. Also, this serves to scale INPUT X62 if used for remote temperature setpoints. | X | X | X |
| | MRange PressSens (S) | 29 PSI | 0-1449 PSI | Sets the end of the scale for a pressure sensor connected to terminal X61. Also, this serves to scale INPUT X62 if used for remote pressure setpoints. | X | X | X |
| | Ext Inp X62 U/I (S) | 4..20 mA | 4..20 mA<br>2..10 V<br>0..10 V<br>0..20 mA | Configuration of terminal X62. Can be 0-10VDC, 2-10VDC, 0-20mA or 4-20mA. This terminal is usually used for remote setpoint or remote modulation. This input signal is scaled by parameter ***MeasureRangePtNi*** , ***MRange TempSens*** or ***MRange PressSens*** .<br>NOTE : For 4-20mA signals, signal limits are 3mA to 21mA. For 0-10 VDC signals, signal limit is 10.5 VDC. Signals not in this range will cause an alarm. | X | X | X |
| | Ext MinSetpoint (S) | 0% | 0-100% | Establishes the minimum external setpoint that can be input via terminals X62 or via Modbus. This is a percentage of the range of the attached sensor. | X | X | X |
| | Ext MaxSetpoint (S) | 60% | 0-100% | Establishes the maximum external setpoint that can be input via terminals X62 or via Modbus. This is a percentage of the range of the attached sensor. | X | X | X |
| **Params & Display>** LoadController> Configuration> Analog Output | OutValuSelection (S) | Load | See Description | This selects the process value associated with analog OUTPUT X63. The selected process value will be transmitted from X63 with either a 0-20mA or a 4-20mA signal. The 15 choices for this output are:<br>1) Load - The current load of the burner using 4-20mA.<br>2) Load 0 - The current load of the burner using 4-20mA or 0-20mA.<br>3) O2 - The percent O2 currently read by the stack O2 sensor.<br>4) Pos Air - The current position of the air actuator in angular degrees.<br>5) Pos Fuel - The current position of the fuel actuator in angular degrees.<br>6) Pos Aux1 - The current position of the Aux 1 actuator in angular degrees.<br>7) Pos Aux2 - The current position of the Aux 2 actuator in angular degrees.<br>8) Pos Aux3 - The current position of the Aux 3 actuator in angular degrees.<br>9) Speed VSD - The current speed of the VSD motor in percent.<br>10) Flame - The current raw flame signal.<br>11) Temp Pt1000 - The temperature read by the Pt1000 sensor on terminal X60.<br>12) Temp Ni1000 - The temperature read by the Ni1000 sensor on terminal X60.<br>13) Temp Pt100 - The temperature read by the Pt100 sensor on terminal X60.<br>14) Temp X61 - The temperature read by the temperature transducer on terminal X61.<br>15) Press X61 - The pressure read by the pressure transducer on terminal X61. | X | X | X |

| **LEGEND -** Password Access: (U)=User, (S)=Service, (O)=OEM, Shaded = Commonly Used, ** = Must Set, X = Has Function, / = Partial Function | | | | | **LMV** | | |
|---|---|---|---|---|---|---|---|
| **Menu Path** | **Parameter** | **Default** | **Range** | **Description** | 51.1 | 52.2 | 52.4 |
| **Params & Display>** LoadController> Configuration> Analog Output | CurrMode 0/4mA (S) | 0..20mA | 0..20mA<br>4..20mA | Selects the output signal of X63 to be either a 0-20mA signal or a 4-20mA signal. NOTE: This has no effect when ***OutValueSelection*** is set to "Load". | X | X | X |
| | Scale20mA perc (S) | 100% | 0-999.9% | Scales the analog output for the percent values (other than Load). Specifically, this parameter defines what percentage of Load 0, O2, Speed VSD, or Flame will output 20mA. | X | X | X |
| | Scale20mA temp (S) | 1562 F | 32-3632 F | Scales the analog output for the temperature values. Specifically, this parameter defines what temperature (read by Temp Pt1000,Temp Ni1000, etc.) will output 20mA. | X | X | X |
| | Scale20mA press (S) | 2 PSI | 0-1449 PSI | Scales the analog output for the pressure value. Specifically, this parameter defines what pressure (read by Press X61) will output 20mA. | X | X | X |
| | Scale20mA angle (S) | 90 deg | 0-90 deg | Scales the analog output for the actuators. Specifically, this parameter defines what angular degrees will output 20mA. | X | X | X |
| | Scale 0/4mA (S) | 0% | 0-999.9% | Sets the start of the scale for every process value other than "Load". (The start of the scale "Load 0" can be set here, but if "Load" is selected this parameter has no effect.) For example : If parameter ***OutValueSelection*** is set to "Pos Air", ***CurrMode 0/4mA*** is set to 4mA, ***Scale20mA angle*** is set to 90 deg, and ***Scale 0/4mA*** is set to 0%, then 12 mA will be output when the air actuator is at 45 degrees, and 20mA will be output at 90 degrees. If all other values are unchanged and ***Scale 0/4mA*** is now set to 50%, then 4 mA will be output when the air actuator is 45 degrees, and 20mA will be output when the actuator is at 90 degrees. | X | X | X |
| **Params & Display>** LoadController> Adaption | StartAdaption (U) | Go into parameter and then press Enter to start adaption | | This starts the adaption process. During the adaption process, the LMV5 will determine the thermal response of the system (burner / boiler and attached thermal users). Values for PID will be calculated based on this information. The LMV5 does this by modulating to minimum load and letting the system "settle" to a particular pressure or temperature. After this "settling" period, the LMV5 will modulate up to the ***AdaptionLoad*** and see how long it takes for the system temperature / pressure to respond.<br>Based off of this response, the LMV5 will choose values for P, I, and D. These calculated values are implemented by choosing "Adaption" under ***StandardParam*** .<br>NOTE: Adaption has to be started when the burner is running and a representative load exists on the system. | X | X | X |
| | AdaptionLoad (U) | 100% | 40-100% | This load is used to determine the thermal response of the system during adaption only. LMV5 will travel to this load during the heating phase of the adaption. | X | X | X |
| **Params & Display>** LoadController | SW Version (U) | Read Only | | Software version of the load controller. | X | X | X |

| **LEGEND -** Password Access: (U)=User, (S)=Service, (O)=OEM, Shaded = Commonly Used, ** = Must Set, X = Has Function, / = Partial Function | | | | | **LMV** | | |
|---|---|---|---|---|---|---|---|
| **Menu Path** | **Parameter** | **Default** | **Range** | **Description** | 51.1 | 52.2 | 52.4 |
| **Params & Display>** AZL> Times | PasswordTime (O) | 120min | 10-480min | Sets the length of time before the password times out. | X | X | X |
| | Sum/WinterTime (U) | Automatic | Manual<br>Automatic | Manual: Daylight savings time disabled.<br>Automatic: Daylight savings time enabled. | X | X | X |
| | Time EU/US (U) | S/W time US | S/W time US<br>S/W time EU | Daylight savings time schedule. US setting starts the first Sunday in April and ends the last Sunday in October. | X | X | X |
| **Params & Display>** AZL | Language (U) | English | See Description | Selects the language for the AZL display. Options are English, Deutsch, Francais, Espagnol, Italiano or Portuguese. | X | X | X |
| | DateFormat (U) | MM-DD-YY | DD.MM.YY<br>MM-DD-YY | Selects the date format. Choices: MM-DD-YY (US) or DD.MM.YY (European). | X | X | X |
| **Params & Display>** AZL | PhysicalUnits (U) | F / psi | F / psi<br>C / bar | Either °C / bar or °F / psi can be chosen. | X | X | X |
| **Params & Display>** AZL> eBUS | Address (U) | 1 | 1-8 | Sets the LMV5 address for eBUS (job specific). | X | X | X |
| | SendCycleBU (U) | 30s | 10-60s | Sets the cycle time for the LMV5 to send data to the BAS (job specific). | X | X | X |
| **Params & Display>** AZL> Modbus | Address (U) | 1 | 1-247 | Sets the LMV5 address for Modbus (job specific). | X | X | X |
| | Baudrate (U) | 19200 bit/s | 9600 bit/s<br>19200 bit/s | Sets the baud rate of the Modbus port, which is an RJ45 jack located on the underside of the AZL. Also affects data output. NOTE: To use Modbus, it must be activated at: *Operation > OptgModeSelect* . | X | X | X |
| | Parity (U) | no | no<br>odd<br>even | This sets the parity of the Modbus port. Also affects data output. | X | X | X |
| | Timeout (U) | 30s | 0-7200s | If no communication occurs for this period, the AZL considers the Modbus to be unavailable. If the AZL considers the Modbus to be unavailable, then it will make setpoint W1 the current setpoint. Other Modbus values will remain what they were previously and / or be overwritten by input through the AZL. | X | X | X |
| | Local / Remote (U) | local | local<br>remote | This enables or disables the use of a Modbus conveyed setpoint, setpoint W3.<br>Local - W3 will not be observed.<br>Remote - if there is no timeout condition and the remote operating mode is automatic, then setpoint W3 will be observed. | X | X | X |
| | Remote Mode (U) | Read Only | | View the Modbus remote mode status: Automatic, Manual, Burner off | X | X | X |
| | W3 (U) | 32 F | 32-3632 F<br>0-1449 PSI | W3 is the Modbus conveyed setpoint. Use with operating mode IntLC Bus. | X | X | X |

| **LEGEND -** Password Access: (U)=User, (S)=Service, (O)=OEM, Shaded = Commonly Used, ** = Must Set, X = Has Function, / = Partial Function | | | | | **LMV** | | |
|---|---|---|---|---|---|---|---|
| **Menu Path** | **Parameter** | **Default** | **Range** | **Description** | 51.1 | 52.2 | 52.4 |
| **Params & Display>** AZL | Display Contrast (U) | Adjust as needed | | Change with < > keys, store with the Enter key, or cancel with the Esc key. | X | X | X |
| **Params & Display>** AZL> ProductID | ASN (U) | Read Only | | Information concerning the AZL. | X | X | X |
| | ProductionDate (U) | | | | X | X | X |
| | SerialNumber (U) | | | | X | X | X |
| | ParamSet Code (U) | | | | X | X | X |
| | ParamSet Vers (U) | | | | X | X | X |
| **Params & Display>** AZL | SW Version (U) | Read Only | | Software version on the AZL. | X | X | X |
| **Params & Display>** Actuators> Addressing | 1 AirActuator (S) | 1 blink = Air | | Enables addressing of the actuators. Select one of the actuators and press Enter. The AZL will then serve as a guide through the rest of the procedure. This procedure involves pressing a red button (hold about 1s) on the selected actuator. The actuators can be wired and addressed in any order. The green LED will be on when the actuator is powered and not addressed, and it will blink after it has been addressed. NOTE: Holding the red button on the actuator down for approx. 10 sec will clear the addressing on that actuator. | X | X | X |
| | 2 GasActuat(Oil) (S) | 2 blink = Gas(Oil) | | | X | X | X |
| | 3 OilActuator (S) | 3 blink = Oil | | | X | X | X |
| | 4 AuxActuator (S) | 4 blink = Aux 1 | | | X | X | X |
| | 5 AuxActuator2 (S) | 5 blink = Aux 2 | | | | X | X |
| | 6 AuxActuator3 (S) | 6 blink = Aux 3 | | | | X | X |
| **Params & Display>** Actuators> DirectionRot | DeleteCurves (S) | Go into parameter then press Enter to delete | | This deletes the ratio control (fuel / air) curves and the ignition positions. Curves must be deleted if the direction of rotation on any actuator is to be changed. | X | X | X |
| | 1 AirActuator (O) | standard | standard reversed | Sets the direction of rotation for each actuator, regardless of which fuel is selected. Looking at the actuator with the shaft pointed at eye: **standard** - shaft rotates counterclockwise to open. **reversed** - shaft rotates clockwise to open. These descriptions are opposite if viewed from the cover end of the actuator (shaft pointing away from eye). | X | X | X |
| | 2 GasActuat(Oil) (O) | | | | X | X | X |
| | 3 OilActuator (O) | | | | X | X | X |
| | 4 AuxActuator (O) | | | | X | X | X |
| | 5 AuxActuator2 (O) | | | | | X | X |
| | 6 AuxActuator3 (O) | | | | | X | X |
| **Params & Display>** Actuators> ProductID> 1 AirActuator | ASN (U) | Read Only | | Information concerning the currently addressed air actuator. | X | X | X |
| | ProductionDate (U) | | | | X | X | X |
| | SerialNumber (U) | | | | X | X | X |
| | ParamSet Code (U) | | | | X | X | X |
| | ParamSet Vers (U) | | | | X | X | X |

| **LEGEND -** Password Access: (U)=User, (S)=Service, (O)=OEM, Shaded = Commonly Used, ** = Must Set, X = Has Function, / = Partial Function | | | | | **LMV** | | |
|---|---|---|---|---|---|---|---|
| **Menu Path** | **Parameter** | **Default** | **Range** | **Description** | 51.1 | 52.2 | 52.4 |
| **Params & Display>** Actuators> ProductID> 2 GasActuat(Oil) | ASN (U) | Read Only | | Information concerning the currently addressed gas(oil) actuator. | X | X | X |
| | ProductionDate (U) | | | | X | X | X |
| | SerialNumber (U) | | | | X | X | X |
| | ParamSet Code (U) | | | | X | X | X |
| | ParamSet Vers (U) | | | | X | X | X |
| **Params & Display>** Actuators> ProductID> 3 OilActuator | ASN (U) | Read Only | | Information concerning the currently addressed oil actuator. | X | X | X |
| | ProductionDate (U) | | | | X | X | X |
| | SerialNumber (U) | | | | X | X | X |
| | ParamSet Code (U) | | | | X | X | X |
| | ParamSet Vers (U) | | | | X | X | X |
| **Params & Display>** Actuators> ProductID> 4 AuxActuator | ASN (U) | Read Only | | Information concerning the currently addressed aux1 actuator. | X | X | X |
| | ProductionDate (U) | | | | X | X | X |
| | SerialNumber (U) | | | | X | X | X |
| | ParamSet Code (U) | | | | X | X | X |
| | ParamSet Vers (U) | | | | X | X | X |
| **Params & Display>** Actuators> ProductID> 5 AuxActuator2 | ASN (U) | Read Only | | Information concerning the currently addressed aux2 actuator. | | X | X |
| | ProductionDate (U) | | | | | X | X |
| | SerialNumber (U) | | | | | X | X |
| | ParamSet Code (U) | | | | | X | X |
| | ParamSet Vers (U) | | | | | X | X |
| **Params & Display>** Actuators> ProductID> 6 AuxActuator3 | ASN (U) | Read Only | | Information concerning the currently addressed aux3 actuator. | | X | X |
| | ProductionDate (U) | | | | | X | X |
| | SerialNumber (U) | | | | | X | X |
| | ParamSet Code (U) | | | | | X | X |
| | ParamSet Vers (U) | | | | | X | X |
| **Params & Display>** Actuator> SW Version | 1 AirActuator (U) | Read Only | | Information concerning the software versions of the attached actuators. | X | X | X |
| | 2 GasActuat(Oil) (U) | | | | X | X | X |
| | 3 OilActuator (U) | | | | X | X | X |
| | 4 AuxActuator (U) | | | | X | X | X |
| | 5 AuxActuator2 (U) | | | | | X | X |
| | 6 AuxActuator3 (U) | | | | | X | X |

| **LEGEND -** Password Access: (U)=User, (S)=Service, (O)=OEM, Shaded = Commonly Used, ** = Must Set, X = Has Function, / = Partial Function | | | | | **LMV** | | |
|---|---|---|---|---|---|---|---|
| **Menu Path** | **Parameter** | **Default** | **Range** | **Description** | 51.1 | 52.2 | 52.4 |
| **Params & Display>** VSD Module> Configuration | ReleasecontctVSD (S) | closed | open<br>closed | This sets the behavior of the run / stop dry contact (terminals X73.1 and X73.2) from postpurge (phase 78) into phase 10 when the VSD is driving to home position (0 RPM). If set to open, the blower will freewheel after phase 78. If set to closed, the blower speed will be ramped down according to parameter ***TimeNoFlame*** . Typically set to open if VSD does not have a braking resistor and closed if VSD has a braking resistor. | | X | X |
| | TolQuickShutdown (O) | 10% | 0-100% | This sets the percentage of speed deviation from the desired blower speed that will cause an immediate shut down of the burner. Note: 100% means no quick shutdown (function deactivated) and is not recommended. | | X | X |
| **Params & Display>** VSD Module> Configuration> Speed | Num Puls per R (S) | 3 | 3-6 | This sets the expected number of pulses per motor revolution. This setting depends upon what type of speed wheel is used. | | X | X |
| | Standardization (S) | deact | activated<br>deactivated | This starts the standardization process for the motor driven by the VSD. When activated, it will ramp the VSD up and then down with the air damper open. During this time the LMV52 will correlate a milliamp signal to the peak motor RPM. | | X | X |
| | StandardizedSp (S) | 1 RPM | 1-6300 RPM | Shows the motor speed corresponding to a 95% input signal to the VSD / motor combination. This is automatically set when the VSD / motor is standardized. It can be set manually, but this is not recommended in most circumstances. | | X | X |
| | Absolute Speed (U) | Read Only | | This displays the real time speed of the blower motor in RPM (tachometer). | | X | X |
| | Setpoint Output (S) | 4..20 mA | 0..20 mA<br>4..20 mA | This sets what the output signal will be to the VSD. It can be set to 4-20mA or 0-20mA. | | X | X |
| | Setteling Time (O) | 16<br>(400ms) | 8-200<br>(200-5000ms) | This sets a filter time or a delay time between when a speed is read from the speed wheel to when the LMV52 attempts to correct the speed. This feature is in effect during modulation. Setting is multipled by 25 milliseconds, so a setting of 16 yields 400ms or 0.4 seconds. | | X | X |
| **Params & Display>** VSD Module> Configuration> Fuel Meter | PulseValueGas (S) | 1 | 0-999.99999 | This sets the number of pulses per unit of gas flow (for use with gas meters having a pulsed output). Can be set for pulses per cubic meter or pulses per cubic foot. | | X | X |
| | PulseValueOil (S) | 1 | 0-9999.9999 | This sets the number of pulses per unit of oil flow (for use with oil meters having a pulsed output). Can be set for pulses per gallon or pulses per cubic liter. | | X | X |

| **LEGEND -** Password Access: (U)=User, (S)=Service, (O)=OEM, Shaded = Commonly Used, ** = Must Set, X = Has Function, / = Partial Function | | | | | **LMV** | | |
|---|---|---|---|---|---|---|---|
| **Menu Path** | **Parameter** | **Default** | **Range** | **Description** | 51.1 | 52.2 | 52.4 |
| **Params & Display>** VSD Module> Process Data | Max Stat Dev (U) | Read Only | | Records the maximum VSD speed deviation from setpoint during steady state operation (steady load) during a run period. 0 to 100% of standarized speed. | | X | X |
| | Max Dyn Dev (U) | Read Only | | Maximum motor speed deviation from setpoint during an acceleration or deceleration of the motor (changing load) during a run period. Range = 0 to 100% | | X | X |
| | Num Dev >0.3% (U) | Read Only | | The number of speed deviations exceeding 0.3% of the standardized speed at the end of a modulation event. Max = 255 deviations. | | X | X |
| | Num Dev >0.5% (U) | Read Only | | The number of speed deviations exceeding 0.5% of the standardized speed at the end of a modulation event. Max = 255 deviations. | | X | X |
| | Absolute Speed (U) | Read Only | | This displays the real time speed of the blower motor in RPM. Max is 6553 RPM. | | X | X |
| **Params & Display>** VSD Module> ProductID | ASN (U) | Read Only | | Information concerning the VSD board (pieces internal to the LMV5). | | X | X |
| | ProductionDate (U) | | | | | X | X |
| | SerialNumber (U) | | | | | X | X |
| | ParamSet Code (U) | | | | | X | X |
| | ParamSet Vers (U) | | | | | X | X |
| **Params & Display>** VSD Module | SW Version (U) | Read Only | | Software version of the VSD control. | | X | X |
| **Params & Display>** O2 Module> Configuration | O2 Sensor (S) | no sensor | no sensor<br>QGO20<br>QGO21 | Configures the PLL module for the connected O2 sensor. | | X | X |
| | O2SensServTim (S) | 0 days | 0-65535 days | Sets the service interval for the O2 sensor. The time set here is compared against the total hours run counter. See *Operation > HoursRun* . Upon expiration of service interval, different actions will be taken based on O2 trim operating mode. If in 'conAutoDeac', then O2 trim will auto deactivate. If operating mode is set to 'O2 Control' or 'O2 Alarm', a lockout will occur. If set to 0, feature is deactivated. | | X | X |
| | O2SensServTimRes (S) | deact | activated<br>deactivated | Resets the service interval for the O2 sensor. Reset once service work has been completed. | | X | X |
| | SupAirTempSens (S) | no sensor | no sensor<br>Ni1000<br>Pt1000 | Configures the PLL module for the appropriate ambient air temperature sensor. Sensor is not required for O2 trim, but is required for the efficiency calculation. | | X | X |

| **LEGEND -** Password Access: (U)=User, (S)=Service, (O)=OEM, Shaded = Commonly Used, ** = Must Set, X = Has Function, / = Partial Function | | | | | **LMV** | | |
|---|---|---|---|---|---|---|---|
| **Menu Path** | **Parameter** | **Default** | **Range** | **Description** | 51.1 | 52.2 | 52.4 |
| **Params & Display>** O2 Module> Configuration | AirTempX60PT1000 (O) | deact | activated deactivated | Configures LMV5 INPUT X60 for a PT1000 ambient air temperature sensor. Sensor is not required for O2 trim, but is required for the efficiency calculation. Ambient air temperature sensor can be wired into terminal X60 of the LMV5 instead of the PLL module if X60 is not being used for other temperature sensors. | | X | X |
| | FlueGasTempSens (S) | no sensor | no sensor Ni1000 Pt1000 | Configures the PLL module for the appropriate flue gas temperature sensor. Sensor is not required for O2 trim, but is required for the efficiency calculation. | | X | X |
| | MaxTempFlGasGas (S) | 752 F | 32-1562 F | Maximum flue temperature setpoint for each fuel. A warning will appear if temperatures exceed this setting. PLL52 module must have a flue gas sensor wired in for this function. | | X | X |
| | MaxTempFlGasOil (S) | | | | | X | X |
| **Params & Display>** O2 Module> Process Data | Current O2 Value (U) | Read Only | | This displays the current O2 value. O2 measured on a wet basis. | | X | X |
| | O2 Setpoint (U) | Read Only | | This displays the O2 setpoint at any operating point. This is the target for the O2 trim. | | X | X |
| | SupplyAirTemp (U) | Read Only | | This displays the current ambient air temperature. | | X | X |
| | FlueGasTemp (U) | Read Only | | This displays the current flue gas temperature. | | X | X |
| | CombEfficiency (U) | Read Only | | This displays the current combustion efficiency. If the O2 sensor is deactivated, this number will not be displayed. Also, the flue and ambient temperatures are needed for this number to display. | | X | X |
| | QGO SensorTemp (U) | Read Only | | This displays the current O2 sensor internal temperature. Absolute minimum operating temperature = 1202 F. Normal operating temperature for QGO20 is approximately 1292 F. | | X | X |
| | QGO HeatingLoad (U) | Read Only | | This displays the current heating load for the O2 sensor. The PLL serves as the temperature control for the QGO20 sensor. Maximum heating load is 60%. | | X | X |
| | QGO Resistance (U) | Read Only | | This measures the resistance of the O2 sensor. As a sensor is used, the resistance increases. New sensors have a resistance of approximately 5 ohms. A reading of 0 ohms indicates that a self-test has not been performed after a power off of the LMV5. When this value exceeds 150 ohms, the sensor should be replaced. | | X | X |
| **Params & Display>** O2 Module> ProductID | ASN (U) | Read Only | | Information concerning the currently connected O2 sensor. | | X | X |
| | ProductionDate (U) | | | | | X | X |
| | SerialNumber (U) | | | | | X | X |
| | ParamSet Code (U) | | | | | X | X |
| | ParamSet Vers (U) | | | | | X | X |

| **LEGEND -** Password Access: (U)=User, (S)=Service, (O)=OEM, Shaded = Commonly Used, ** = Must Set, X = Has Function, / = Partial Function | | | | | **LMV** | | |
|---|---|---|---|---|---|---|---|
| **Menu Path** | **Parameter** | **Default** | **Range** | **Description** | 51.1 | 52.2 | 52.4 |
| **Params & Display>**<br>O2 Module | SW Version (U) | Read Only | | Software version of the O2 module (PLL module). | | X | X |
| **Params & Display>**<br>Flue Gas Recirc. | FGR-Mode (S) | Aux3on Curve | Aux3onCurve<br>time<br>temperature<br>temp.contr.<br>TCautoDeact<br>deactMinpos<br>auto deact | Sets the mode of the FGR hold for the Aux 3 actuator. Seven seperate operating modes exist. These are:<br>1) Aux3onCurve- Function deactivated and Aux 3 actuator always operates on its programmed curve.<br>2) time - Aux 3 actuator stays at ignition position until ***DelayTimeFGR Gas(Oil)*** timer expires.<br>3) temperature - Aux 3 actuator stays at ignition position until ***ThresholdFGR Gas(Oil)*** temperature is reached.<br>4) temp.contr. - Position of Aux 3 actuator is based on flue temp, ***Factor FGR Gas(Oil)*** , and the programmed curve for the Aux 3 actuator (LMV52.4 only).<br>5) TCautoDeact - same as Temp.contr but automatically deactivates if there is a fault with the flue gas sensor (LMV52.4 only).<br>6) deactMinpos - after ignition position, Aux 3 actuator is held closed (LMV52.4 only).<br>7) auto deact - do not select this option. It is displayed if the FGR hold was deactivated due to a sensor issue (LMV52.4 only). | | / | X |
| | FGR-sensor (S) | X86PtNi 1000 | X86PtNi1000<br>X60 Pt1000<br>X60 Ni1000 | Selects the type and wiring location of the flue gas sensor for the FGR functions. | | X | X |
| | actTmpFGR-sensor (U) | Read Only | | The actual temperature read by the selected FGR sensor can be viewed at this parameter. | | X | X |
| | ThresholdFGR Gas(Oil) (S) | 752 F | 32-1562 F | This sets the temperature that must be achieved to release the Aux 3 actuator to modulate. Only has an effect if parameter ***FGR-Mode*** is set to "temperature". | | X | X |
| | DelaytimeFGR Gas(Oil) (S) | 300s | 0-63min | This sets the time that must elapse before the Aux 3 actuator is released to modulate. Only has an effect if parameter ***FGR-Mode*** is set to "time". | | X | X |
| | Factor FGR Gas(Oil) (S) | 100% | 10-100% | Adjustment of calculated temperature dependent position of the Aux 3 actuator. An adjustment of less than 100% reduces the position of the Aux 3 actuator. 100% means no adjustment. Factor only has an effect when FGR temperature is different than when ratio curves were commissioned. | | | X |

| **LEGEND -** Password Access: (U)=User, (S)=Service, (O)=OEM, Shaded = Commonly Used, ** = Must Set, X = Has Function, / = Partial Function | | | | | **LMV** | | |
|---|---|---|---|---|---|---|---|
| **Menu Path** | **Parameter** | **Default** | **Range** | **Description** | 51.1 | 52.2 | 52.4 |
| **Params & Display>** Flue Gas Recirc. | OperationTempGas(Oil) (S) | Read Only | | Displays the recorded flue gas recirculation temperatures for each point. This is recorded when commissioning the ratio control curves. | | | X |
| | FGR MinPos (S) | 0 deg | 0-90 deg | Minimum angular position for the Aux 3 actuator when in temp.contr or TCautoDeact operating modes. Serves as a default position if an auto deact occurs. | | | X |
| | FGR MaxPos Fact (S) | 10% | 0-100% | Maximum value (limit on the Aux 3 actuator) calculated by comparing the current FGR temperature to the stored values. | | | X |
| **Params & Display>** SystemConfig | LC_OptgMode (U) | IntLC | ExtLC X5-03<br>IntLC<br>IntLC Bus<br>IntLC X62<br>ExtLC X62<br>ExtLC Bus | Current operating mode of the LMV5. Can also be changed at: *Params & Display > LoadController > Configuration > LC_OptgMode* . If "Load Controller not active..." message was seen under: *Params & Display > LoadController > Configuration > LC_OptgMode* , adjust this parameter to "IntLC" and return to *Params & Display > LoadController > Configuration > LC_OptgMode* . | X | X | X |
| | Ext Inp X62 U/I (S) | 4..20 mA | 4..20 mA<br>2..10 V<br>0..10 V<br>0..20 mA | See: *Params & Display > LoadController > Configuration > Ext Inp X62 U/I* | X | X | X |
| **Params & Display>** SystemConfig> TempLimiter | TL_Thresh_Off (S) | 203 F | 32-3632 F | See: *Params & Display > LoadController > TempLimiter > TL_ThreshOff* | X | X | X |
| | TL_SD_On (S) | -5% | -50-0% | See: *Params & Display > LoadController > TempLimiter > TL_SD_On* | X | X | X |
| | Sensor Select (S) | Pt100 | Pt100<br>Pt1000<br>Ni1000<br>TempSensor<br>PressSensor<br>Pt100Pt1000<br>Pt100Ni1000<br>NoSensor | See: *Params & Display > LoadController > Configuration > Sensor Select* | X | X | X |
| | MeasureRangePtNi (S) | 302 F | 302 F<br>752 F<br>1562 F | See: *Params & Display > LoadController > Configuration > MeasureRangePtNi* | X | X | X |

| **LEGEND -** Password Access: (U)=User, (S)=Service, (O)=OEM, Shaded = Commonly Used, ** = Must Set, X = Has Function, / = Partial Function | | | | | **LMV** | | |
|---|---|---|---|---|---|---|---|
| **Menu Path** | **Parameter** | **Default** | **Range** | **Description** | 51.1 | 52.2 | 52.4 |
| **Params & Display>** SystemConfig | O2Ctrl/LimitrGas (S) | man deact | See Description | See: *Params & Display > O2Contr/Alarm > GasSettings > OptgMode* | | X | X |
| | O2Ctrl/LimitrOil (S) | | | | | | |
| | LC Analog Output (S) | Load | See Description | See: *Params & Display > LoadController > Configuration > Analog Output > OutValuSelection* | X | X | X |
| | allowed Pot.diff (S) | 15 | 10-15 | Sets the allowable difference between channels A and B of the actuator's potentiometer. Units are tenths of a degree, so 10 = 1.0 degrees. | X | X | X |
| | OptgMode COx Gas (S) | deact | deactivated COx Control COx Limiter | Future functionality. Does nothing at this time. | | | X |
| | OptgMode COx Oil (S) | deact | | | | | X |
| | AirTempX60PT1000 (O) | deact | activated deactivated | See: *Params & Display > O2 Module> Configuration > AirTempX60PT1000* | | X | X |
| **Params & Display>** HoursRun> | GasFiring (U) | 0 | 0-999999 hr | Hours run firing gas. Can be adjusted here. See: *Operation > HoursRun* | X | X | X |
| | OilStage1/Mod (U) | | | Hours run on modulating or stage 1 oil. Can be adjusted here. See: *Operation > HoursRun* | X | X | X |
| | OilStage2 (U) | | | Hours run on stage 2 oil. Can be adjusted here. See: *Operation > HoursRun* | X | X | X |
| | OilStage3 (U) | | | Hours run on stage 3 oil. Can be adjusted here. See: *Operation > HoursRun* | X | X | X |
| | TotalHoursReset (U) | | | Hours run on all fuels. Can be adjusted here. See: *Operation > HoursRun* | X | X | X |
| | TotalHours (U) | Read Only | | These values CANNOT be adjusted or reset. See: *Operation > HoursRun* | X | X | X |
| | SystemOnPower (U) | Read Only | | | X | X | X |
| **Params & Display>** HoursRun> Reset | GasFiring (U) | Reset Only | | Hours run firing gas. Can be reset here. See: *Operation > HoursRun* | X | X | X |
| | OilStage1/Mod (U) | | | Hours run on modulating or stage 1 oil. Can be reset here. See: *Operation > HoursRun* | X | X | X |
| | OilStage2 (U) | | | Hours run on stage 2 oil. Can be reset here. See: *Operation > HoursRun* | X | X | X |
| | OilStage3 (U) | | | Hours run on stage 3 oil. Can be reset here. See: *Operation > HoursRun* | X | X | X |
| | TotalHoursReset (U) | | | Hours run on all fuels. Can be reset here. See: *Operation > HoursRun* | X | X | X |
| **Params & Display>** StartCounter | GasStartCount (U) | 0 | 0-999999 hr | Number of starts for gas. Can be adjusted here. See: *Operation > StartCounter* | X | X | X |
| | OilStartCount (U) | | | Number of starts for oil. Can be adjusted here. See: *Operation > StartCounter* | X | X | X |
| | TotalStartCountR (U) | | | Total number of starts. Can be adjusted here. See: *Operation > StartCounter* | X | X | X |
| | TotalStartCount (U) | Read Only | | Total number of starts. Cannot be reset. | X | X | X |
| **Params & Display>** StartCounter> Reset | GasStartCount (U) | Reset Only | | Number of starts for gas. Can be reset here. See: *Operation > StartCounter* | X | X | X |
| | OilStartCount (U) | | | Number of starts for oil. Can be reset here. See: *Operation > StartCounter* | X | X | X |
| | TotalStartCountR (U) | | | Total number of starts. Can be reset here. See: *Operation > StartCounter* | X | X | X |

| **LEGEND -** Password Access: (U)=User, (S)=Service, (O)=OEM, Shaded = Commonly Used, ** = Must Set, X = Has Function, / = Partial Function | | | | | **LMV** | | |
|---|---|---|---|---|---|---|---|
| **Menu Path** | **Parameter** | **Default** | **Range** | **Description** | 51.1 | 52.2 | 52.4 |
| **Params & Display>** Fuel Meter | Curr Flow Rate (U) | Read Only | | Current flow rate for the fuel being fired. Gas = cubic meters or cubic feet per hour. Oil = liters or gallons per hour. | | X | X |
| | Volume Gas (U) | Read Only | | Totalized volume of gas used since the last reset. | | X | X |
| | Volume Oil (U) | | | Totalized volume of oil used since the last reset. | | X | X |
| | Volume Gas R (U) | Reset Only | | Resets the totalized volume of gas. | | X | X |
| | Volume Oil R (U) | | | Resets the totalized volume of oil. | | X | X |
| | Reset DateGas (U) | Read Only | | This displays the date of the last reset for gas. | | X | X |
| | Reset DateOil (U) | | | This displays the date of the last reset for oil. | | X | X |
| **Updating>** Passwords | ServicePassword (O) | 9876 | 3 to 8 characters | The service level password can be changed here. | X | X | X |
| | OEM Password (O) | START | 4 to 8 characters | The OEM level password can be changed here. | X | X | X |
| **Updating** | BurnerID (O)** | Not Set | 4 to 15 characters | Burner ID must be set here. Typically the burner / boiler serial number is used. Serves as an identifier for the parameter set. | X | X | X |
| **Updating>** ParamsBackup> BackupInfo | Date (U) | Read Only | | This displays the date of the last backup. | X | X | X |
| | TimeOfDay (U) | | | This displays the time of day of the last backup. | X | X | X |
| | BU included? (U) | | | This states if the basic unit (LMV5) was included in the last backup. | X | X | X |
| | AZL included? (U) | | | This states if the AZL was included in the last backup. | X | X | X |
| | LC included? (U) | | | This states if the LC (load controller) was included in the last backup. | X | X | X |
| | ACT1 included? (U) | | | This states if the Act 1 (Actuator 1) was included in the last backup. | X | X | X |
| | ACT2 included? (U) | | | This states if the Act 2 (Actuator 2) was included in the last backup. | X | X | X |
| | ACT3 included? (U) | | | This states if the Act 3 (Actuator 3) was included in the last backup. | X | X | X |
| | ACT4 included? (U) | | | This states if the Act 4 (Actuator 4) was included in the last backup. | X | X | X |
| | ACT5 included? (U) | | | This states if the Act 5 (Actuator 5) was included in the last backup. | | X | X |
| | ACT6 included? (U) | | | This states if the Act 6 (Actuator 6) was included in the last backup. | | X | X |
| | VSD included? (U) | | | This states if the VSD (Variable Speed Drive) was included in the last backup. | | X | X |
| | O2 included? (U) | | | This states if the O2 module was included in the last backup. | | X | X |

| **LEGEND -** Password Access: (U)=User, (S)=Service, (O)=OEM, Shaded = Commonly Used, ** = Must Set, X = Has Function, / = Partial Function | | | | | **LMV** | | |
|---|---|---|---|---|---|---|---|
| **Menu Path** | **Parameter** | **Default** | **Range** | **Description** | 51.1 | 52.2 | 52.4 |
| **Updating>** ParamBackup | LMV5x -> AZL (S) | Go into parameter then press Enter to start | | Transfers a parameter set from the LMV5x to the AZL5. Note that the working parameter set is in the LMV5, not the AZL5. Burner ID in LMV5 will overwrite burner ID in the AZL5. | X | X | X |
| | AZL -> LMV5x (S) | Go into parameter then press Enter to start | | Transfers a parameter set from the AZL5 to the LMV5. The burner ID of the LMV5 must be blank (new LMV5) or must match the burner ID of the parameter set in the AZL5. This feature is useful for transferring parameter sets to identical burners. NOTE: When transferring parameter sets from the AZL5 to the LMV5, do not stop the transfer until "Backup Restore Finished Parameter BC : complete or BC : partial" is shown on the AZL screen. This could take up to 5 minutes. Do not disturb the LMV5 while the backup restore is in progress. | X | X | X |
| **Updating** | Load_SW_from_PC (S) | Go into parameter then press Enter to start | | Enables updating of the AZL5 operating software via the ACS450 software. A .bin file supplies the new software for the AZL5. | X | X | X |
| **PW Login** | Access w-out PW (U) | Press Enter for access | | Access without password. Also called user level. | X | X | X |
| | Access Serv (U) | 9876 | 3 to 8 characters | Access with service level password. | X | X | X |
| | Access OEM (U) | START | 4 to 8 characters | Access with OEM level password. | X | X | X |
| | Access SBT (U) | - | - | Access level not used. | X | X | X |
| **PW Logout** | PW Logout (S) | Press Enter to log out | | Deactivates all passwords, thus reducing access to user level. | X | X | X |
| **SafetyCheckFunct** | LossFlameTest (U) | Go into parameter then press Enter to start | | Enables testing of the flame sensor input on the LMV5 by electronically interrupting the flame signal. | X | X | X |
| | SLT Test (U) | deact | activated deactivated | This enables the safety limit thermostat (SLT) test to check upper safety limits.<br>activated - The internal load controller's setpoint AND switch-off threshold will be ignored, allowing a test of a separate high limit control or pressure relief valve.<br>deactivated - feature is disabled. | X | X | X |
| | SLT-Testload Mod (U) | 100% | 0-100% | This sets the load for the SLT test in modulating operation. | X | X | X |
| | SLT-Testload Stg (U) | S3 | S1-S3 | This sets the load for the SLT test in staged operation. | X | X | X |

## 3-3: Sequence Diagrams

The Siemens LMV5 BMS can perform a number of different burner sequences based upon how certain parameters are set. Although there are a number of parameters that affect small aspects of the burner sequence, the main parameters that affect the sequence are parameters ***FuelTrainGas*** and ***FuelTrainOil***.

These parameters set the framework of the sequence and are based upon the fuel train diagrams in Section 4. The OEM has the option of selecting one of three different gas trains with their associated sequence diagrams, and one of four different oil trains with their associated sequence diagrams (the sequence diagrams and fuel train diagrams for direct spark ignition with heavy oil have been omitted).

The sequence diagrams in Section 3-3 illustrate when input and output terminals are expected to be energized or de-energized. A legend on the bottom of each page describes the various symbols used in the diagrams. The last diagram describes what positions the attached actuators are expected to achieve at each phase and outlines the method that is used to check the actuators position.

**Notes**:

1) Only one fuel select terminal can be energized at a time. If both terminals are energized, the LMV5 will go into lockout. If neither terminal is energized, fuel selection is internal through the AZL5 (***FuelSelect***) or via Modbus.

2) The external burner on / off switch can be disabled with parameter ***InputController***. If activated, this terminal needs to be energized to have the LMV5 start its sequence. The function of terminal X5-03.1 becomes “burner on / off” when any external load control mode is selected.

3) The alarm can be silenced through the AZL (***Alarm act/deact***). This alarm silence resets when the LMV5 is reset or restarted.

4) When using an LMV52, continuous pilot is possible (***ContPilotGas*** / ***ContPilotOil***). If continuous pilot is activated, the pilot valve will remain energized through phase 62.

5) If parameter ***GasPressureMin*** is set to *activated*, the low gas pressure switch is expected to remain closed during phases 21-50 of *LO w Gasp* and *HO w Gasp*, ensuring adequate gas pressure for the pilot. If ***GasPressureMin*** is set to *Deact xOGP*, the low gas pressure switch is expected to remain closed only when firing gas and is not checked when firing oil.

6) If parameter ***OilPumpCoupling*** is set to *Magnetcoupl*, the output for the oil pump can be energized in Phase 22 or in Phase 38, depending upon how parameter ***IgnOilPumpStart*** is set. If parameter ***OilPumpCoupling*** is set to *DirectCoupl*, the output will energize with the blower and de-energize 15 seconds after the blower de-energizes.

7) If gas valve proving is performed on startup (immediately after phase 30), the actuators will be in prepurge position. If gas valve proving is performed on shutdown (immediately after phase 62), the actuators will be in the same position as they were in phase 62. The actuators will not move during valve proving.

8) If parameter ***AirPressureTest*** is set to *activated*, the air pressure switch must open after postpurge is complete, causing input terminal X3-02.1 to de-energize. The LMV5 will wait about 30 seconds in phase 10 (driving to home position) for the switch to open before the LMV5 goes into alarm. This is done to check for welded contacts in the air pressure switch. If air pressure switch alarms are encountered in phase 10, increasing the setpoint of the air pressure switch typically cures this problem. If ***AirPressureTest*** is set to *deactInStby*, the air pressure switch is not checked in phase 10 or 12, but the switch must be open or the LMV5 will not start when it receives a call for heat.

9) The LMV5 can be configured for different reactions to extraneous light (a flame signal when there should not be one). Depending on how parameters ***ReacExtranLight*** and ***ExtranLightTest*** are configured, the LMV5 can lockout, block the startup sequence, or ignore it altogether. The extraneous light test should always be enabled for gas / oil fired boilers. The only time parameter ***ExtranLightTest*** should be set to *deactivated* is for applications such as waste incineration.

10) If direct start is enabled and there is a call for heat after phase 62, the LMV5 will omit phase 78 and will go to phase 79. In phase 79, the LMV5 will check the blower air pressure switch with the blower still running by using a three-way solenoid valve (APS checking).
If the switch checks out, the LMV5 will then proceed directly to phase 24 (driving to prepurge position).

11) Safety Time 1 is defined as the overlap of the ignition spark and pilot valve. Safety Time 2 is defined as the overlap of the pilot valve and the main fuel valves. Interval 1 and Interval 2 are stabilization times for the pilot and main flames, respectively.

12) If parameter ***ContinuousPurge*** is set to activated, fan output X3-01.1 will be energized in all phases. Typically this is used in burner applications where return heat may be a problem.

13) Actuator position is checked by using one of three methods. The method used depends upon the phase of the sequence. *Position Required to Proceed* means that the actuators must achieve and hold a certain position for the sequence to proceed. *Dynamic Position Checking* means that the actuator is evaluated by a "time and distance from target" algorithm. The further the actuator is away from its target position, the less time the actuator is permitted to be in that position. *Run-Time Position Checking* means that the actuator is expected to be at a certain point in a certain amount of time (based off of the run-time of the actuator).

14) For direct spark oil fuel trains, spark (ignition) will occur during prepurge if parameter ***OilPumpCoupling*** is set to *Magnetcoupl* and parameter ***IgnOilPumpStart*** is set to *on in Ph22*.

15) If parameter ***FGR-PS/FCC*** is set for *PSdeactStby*, the status of the FGR pressure switch is not checked in phase 10 or 12. The rest of the sequence is the same as setting this parameter to *FGR-PS*. If parameter ***FGR-PS/FCC*** is set for *PS VSD*, input X4-01.3 must be energized anytime the VSD speed is higher than ***RotSpeed PS on*** and de-energized anytime the VSD speed is lower than ***RotSpeed PS off***.

16) Depending on how parameter ***HeavyOilDirStart*** is set, input X6-01.3 has varying sequences. If this parameter is set for *activ 38/44*, input X6-01.3 must be energized in phase 44. If this parameter is set for *38/44..62*, input X6-01.3 must be energized in phases 44-62. If this parameter is set for *act 21..62*, input X6-01.3 must be energized in phases 21-62. If this parameter is set for *deactivated*, energizing input X6-01.3 has no effect.

17) Inputs X5-03.2 and X5-03.3 have many functions depending on how parameter ***Config X5-03*** is set. The settings are as follows:

*LMV5x std* – If parameter ***LC_OptgMode*** is set to *ExtLC X5-03*, energizing X5-03.2 will decrease the firing rate, while energizing X5-03.3 will increase the firing rate.

*LMV2/3 std* – If parameter ***LC_OptgMode*** is set to *ExtLC X5-03*, energizing X5-03.3 will achieve stage 2 oil, while energizing X5-03.2 will achieve stage 3 oil.

*LMV2/3 inv* – If parameter ***LC_OptgMode*** is set to *ExtLC X5-03*, energizing X5-03.2 will achieve stage 2 oil, while energizing X5-03.3 will achieve stage 3 oil.

*DeaO2/Stp36* – Energizing input X5-03.2 disables $O_2$ trim, while de-energizing X5-03.2 enables $O_2$ trim (LMV52 only). Energizing input X5-03.3 allows the LMV5 to progress past phase 36. If X5-03.3 is de-energized, the LMV5 will remain in phase 36 indefinitely.

*CoolFctStby* – This setting has no effect (LMV50 only).

*AutoDeactO2* – Energizing input X5-03.3 will deactivate O2 trim by setting O2 trim ***OptgMode*** to *auto deact*. O2 trim ***OptgMode*** must be set to *ConAutoDeac* for this function to work. De-energizing X5-03.3 sets the O2 trim ***OptgMode*** back to *ConAutoDeac*. Terminal X5-03.2 has no function with this setting.

## Gas Train : DirectIgniG

| Parameter *ProgramStop* | | | | | | | | | PS | | | PS | | PS | | | | PS | | | | | PS | | PS | | | | | | |
|---|---|---|---|---|---|---|---|---|---|---|---|---|---|---|---|---|---|---|---|---|---|---|---|---|---|---|---|---|---|---|
| | | Lockout Phase | Safety Phase | Home Run Position | Burner Standby | Safety Relay = ON | Release of Startup, SV = ON | Combustion Fan = ON | Drive to Prepurge Pos. | Prepurge | | Prepurge (Aux 3 Drive to Prepurge Pos.) | Prepurge 2 (Aux 3 FGR) | Drive to Ignition Pos. | Preignition (Spark) = ON | Main Valve = ON | Ignition (Spark) = OFF | Interval 1 (Main Stabilization) | Drive to Low Fire Pos. | Operation 1 (Normal Operation) | Operation 2 (Driving to Low Fire) | | Afterburn Time | Driving to Postpurge Position | Mandatory Postpurge 1 | | Optional Postpurge 3 | Direct Start | | Evacuate | Atmospheric Test | Fill | Pressure Test |
| | Phase | 00 | 01 | 10 | 12 | 20 | 21 | 22 | 24 | 30 | | 32 | 34 | 36 | 38 | 40 | 42 | 44 | 54 | 60 | 62 | | 70 | 72 | 74 | 76 | 78 | 79 | | 80 | 81 | 82 | 83 |
| | | | | | | START-UP | | | | | | | | | | | | | | OPER-ATION | | SHUTDOWN | | | | | | | GAS VALVE PROVING | | | |
| | Terminal | Description | Notes | | | | | | | | | PURGE | | | | SAFETY TIME 1 | | | | | | | | | | | | | | | | |
| INPUTS | X4-01.1 | Fuel Select Gas | Note 1 | | | | M | | | | | | | | | | | | | | | | | | | | | | | | | |
| | X3-04.1 | Safety Loop (Limits) | | | | | | | | | | | | | | | | | | | | | | | | | | | | | | |
| | X5-03.1 | ON / OFF Switch | Note 2 | | | | | | | | | | | | | | | | | | | | | | | | | | | | | |
| | N/A | Flame Signal | Note 9 | | | X | X | X | X | X | X | X | X | X | X | M | | | | | | | F | X | X | X | X | X | X | X | X | X |
| | X3-02.1 | Blower Air SW (APS) | Note 8 | | | F | | X | X | | M | | | | | | | | | | | | | | | | | | | | | |
| | X4-01.3 | Blower Aux. Contact (FCC) | | | | | X | X | X | | M | | | | | | | | | | | | | | | | | | | | | |
| | | FGR Press. SW (instead of FCC) | Note 15 | | | | X | X | X | | M | | | | | | | | | | | | | | | | | | | | | |
| | X9-03.2 | POC SW Gas (CPI) | | | | | | | | | | | | | | | | F | X | X | X | | M | | | | | | | | | |
| | | POC SW Oil (CPI) | | | | | | | | | | | | | | | | | | | | | | | | | | | | | | |
| | | POC SW Gas + Oil (CPI) | | | | | | | | | | | | | | | | F | X | X | X | | M | | | | | | | | | |
| | | Press. SW Valve Proving | | | | | | | | | | | | | | | | | | | | | | | | | | | | | | F | X |
| | X9-03.4 | Low Gas Press SW | | | | | | M | | | | | | | | | | | | | | | | | | | | | | | | |
| | X7-03.2 | POC SW Gas (CPI) | | | | | | | | | | | | | | | | F | X | X | X | | M | | | | | | | | | |
| | | POC SW Oil (CPI) | | | | | | | | | | | | | | | | | | | | | | | | | | | | | | |
| | | POC SW Gas + Oil (CPI) | | | | | | | | | | | | | | | | F | X | X | X | | M | | | | | | | | | |
| | | Start Release Gas | | | | | | M | | | | | | | | | | | | | | | | | | | | | | | | |
| | X9-03.3 | High Gas Pressure SW | | | | | | | | | | | | | | | | | | | | | | | | | | | | | | |
| | X6-01.3 | External Flame Safeguard | Note 9 | | | X | X | X | X | X | X | X | X | X | X | M | | | | | | | F | X | X | X | X | X | X | X | X | X |
| | X6-01.1 | Ext. Flame SG Red. Contact | Note 9 | | | | | | | | | | | | | F | X | X | X | X | X | | M | | | | | | | | | |
| OUTPUTS | X3-01.1 | Fan | Note 12 | See Note 12 | | | | | | | | | | | | | | | | | | | | | | | | | | | | |
| | X4-02.3 | Ignition | | X | X | X | X | X | X | X | X | X | X | X | X | | X | X | X | X | X | X | X | X | X | X | X | X | X | X | X | X |
| | X4-03.3 | Start Signal | | X | X | X | X | X | | | | | | | | | | | | | | | | | | | | | | | | |
| | | 3 Way Valve (APS checking) | Note 10 | X | X | X | X | X | X | X | X | X | X | X | X | X | X | X | X | X | X | X | X | X | X | X | X | X | | X | X | X | X |
| | | 3 Way Valve (APS checking) INV. | Note 10 | | | X | X | X | X | | | | | | | | | | | | | | | | | | | | X | | | | |
| | X3-01.2 | Alarm | Note 3 | | X | X | | X | X | X | X | X | X | X | X | X | X | X | X | X | X | X | X | X | X | X | X | X | X | X | X | X | X |
| | X9-01.1 | Gas Valve SV (Usually Outdoor) | | X | X | X | X | X | | | | | | | | | | | | | | | X | X | X | X | X | X | | | | |
| | X8-01.1 | Main Fuel Indicator (Gas) | | X | X | X | X | X | X | X | X | X | X | X | X | | | | | | | | X | X | X | X | X | X | X | X | | X |
| | X9-01.4 | Gas Valve V1 (Main, upstream) | | X | X | X | X | X | X | X | X | X | X | X | X | | | | | | | | X | X | X | X | X | X | X | X | | X |
| | X9-01.3 | Gas Valve V2 (Main, downstream) | | X | X | X | X | X | X | X | X | X | X | X | X | | | | | | | | X | X | X | X | X | X | | X | X | X |

Start-up valve proving, if used. See sequence diagram phases 80 to 83.

Shutdown valve proving, if used. See sequence diagram phases 80 to 83.

Legend :

- Energized
- Energized or De-energized
- X — De-energized
- M — Must be Energized by end of Pha
- F — Must be De-energized by end of Phase

See the first pages of Section 3-3 for notes.

## Gas Train : Pilot Gp1

| Parameter *ProgramStop* | | | | | | | | | | PS | | | PS | | PS | | | | PS | | PS | | | | | | PS | | PS | | | | | | |
|---|---|---|---|---|---|---|---|---|---|---|---|---|---|---|---|---|---|---|---|---|---|---|---|---|---|---|---|---|---|---|---|---|---|---|
| | | Lockout Phase | Safety Phase | Home Run Position | Burner Standby | Safety Relay = ON | Release of Startup, SV = ON | Combustion Fan = ON | Drive to Prepurge Pos. | Prepurge | | Prepurge (Aux 3 Drive to Prepurge Pos.) | Prepurge 2 (Aux 3 FGR) | Drive to Ignition Pos. | Preignition (Spark) = ON | Pilot Valve = ON | Ignition (Spark) = OFF | Interval 1 (Pilot Stabilization) | Safety Time 2 | Interval 2 (Main Stabilization) | Drive to Low Fire Pos. | Operation 1 (Normal Operation) | Operation 2 (Driving to Low Fire) | | Afterburn Time | Driving to Postpurge Position | Mandatory Postpurge 1 | | Optional Postpurge 3 | Direct Start | | Evacuate | Atmospheric Test | Fill | Pressure Test |
| | Phase | 00 | 01 | 10 | 12 | 20 | 21 | 22 | 24 | 30 | | 32 | 34 | 36 | 38 | 40 | 42 | 44 | 50 | 52 | 54 | 60 | 62 | | 70 | 72 | 74 | 76 | 78 | 79 | | 80 | 81 | 82 | 83 |
| | | | | | | START-UP | | | | | | | | | | | | | | | | OPER-ATION | | SHUTDOWN | | | | | | | GAS VALVE PROVING | | | |
| | Terminal | Description | Notes | | | | | | | | | PURGE | | | | SAFETY TIME 1 | | | | | | | | | | | | | | | | | | | |
| INPUTS | X4-01.1 | Fuel Select Gas | Note 1 | | | | M | | | | | | See sequence diagram phases 80 to 83. | | | | | | | | | | | | Shutdown valve proving, if used. See sequence diagram phases 80 to 83. | | | | | | | | | | |
| | X3-04.1 | Safety Loop (Limits) | | | | | | | | | | | | | | | | | | | | | | | | | | | | | | | | | |
| | X5-03.1 | ON / OFF Switch | Note 2 | | | | | | | | | | | | | | | | | | | | | | | | | | | | | | | | |
| | N/A | Flame Signal | Note 9 | | | X | X | X | X | X | X | X | X | X | X | M | | | | | | | | F | X | X | X | X | X | X | X | X | X | X |
| | X3-02.1 | Blower Air SW (APS) | Note 8 | | | F | | X | X | M | | | | | | | | | | | | | | | | | | | | | | | | | |
| | X4-01.3 | Blower Aux. Contact (FCC) | | | | | X | X | X | | M | | | | | | | | | | | | | | | | | | | | | | | | | |
| | | FGR Press. SW (instead of FCC) | Note 15 | | | | X | X | X | | M | | | | | | | | | | | | | | | | | | | | | | | | | |
| | X9-03.2 | POC SW Gas (CPI) | | | | | | | | | | | | | | | | | | | F | X | X | X | M | | | | | | | | | | |
| | | POC SW Oil (CPI) | | | | | ` | | | | | | | | | | | | | | | | | | | | | | | | | | | | | |
| | | POC SW Gas + Oil (CPI) | | | | | | | | | | | | | | | | | | | F | X | X | X | M | | | | | | | | | | |
| | | Press. SW Valve Proving | | | | | | | | | | | | | | | | | | | | | | | | | | | | | | | | F | X |
| | X9-03.4 | Low Gas Press SW | | | | | | M | | | | | | | | | | | | | | | | | | | | | | | | | | | |
| | X7-03.2 | POC SW Gas (CPI) | | | | | | | | | | | | | | | | | | | F | X | X | X | M | | | | | | | | | | |
| | | POC SW Oil (CPI) | | | | | | | | | | | | | | | | | | | | | | | | | | | | | | | | | |
| | | POC SW Gas + Oil (CPI) | | | | | | | | | | | | | | | | | | | F | X | X | X | M | | | | | | | | | | |
| | | Start Release Gas | | | | | | M | | | | | | | | | | | | | | | | | | | | | | | | | | | |
| | X9-03.3 | High Gas Pressure SW | | | | | | | | | | | | | | | | | | | | | | | | | | | | | | | | | |
| | X6-01.3 | External Flame Safeguard | Note 9 | | | X | X | X | X | X | X | X | X | X | X | M | | | | | | | | F | X | X | X | X | X | X | X | X | X | X |
| | X6-01.1 | Ext. Flame SG Red. Contact | Note 9 | | | | | | | | | | | | | F | X | X | X | X | X | X | X | M | | | | | | | | | | |
| OUTPUTS | X3-01.1 | Fan | Note 12 | See Note 12 | | | | | | | | | | | | | | | | | | | | | | | | | | | | | | | |
| | X4-02.3 | Ignition | | X | X | X | X | X | X | X | X | X | X | X | | | X | X | X | X | X | X | X | X | X | X | X | X | X | X | X | X | X | X | X |
| | X4-03.3 | Start Signal | | X | X | X | X | X | | | | | | | | | | | | | | | | | | | | | | | | | | | |
| | | 3 Way Valve (APS checking) | Note 10 | X | X | X | X | X | X | X | X | X | X | X | X | X | X | X | X | X | X | X | X | X | X | X | X | X | X | X | | X | X | X | X |
| | | 3 Way Valve (APS checking) INV. | Note 10 | | | X | X | X | X | | | | | | | | | | | | | | | | | | | | | | X | | | | |
| | X3-01.2 | Alarm | Note 3 | | X | X | | X | X | X | X | X | X | X | X | X | X | X | X | X | X | X | X | X | X | X | X | X | X | X | X | X | X | X | X |
| | X9-01.1 | Gas Valve SV (Usually Outdoor) | | X | X | X | X | X | | | | | | | | | | | | | | | | | X | X | X | X | X | X | | | | |
| | X9-01.2 | Gas Valve PV (Pilot Valve) | Note 4 | X | X | X | X | X | X | X | X | X | X | X | X | | | | | X | X | X | X | X | X | X | X | X | X | X | X | X | X | X | X |
| | X8-01.1 | Main Fuel Indicator (Gas) | | X | X | X | X | X | X | X | X | X | X | X | X | | | | | | | | | X | X | X | X | X | X | X | X | X | | X |
| | X9-01.4 | Gas Valve V1 (Main, upstream) | | X | X | X | X | X | X | X | X | X | X | X | X | | | | | | | | | X | X | X | X | X | X | X | X | X | | X |
| | X9-01.3 | Gas Valve V2 (Main, downstream) | | X | X | X | X | X | X | X | X | X | X | X | X | X | X | X | | | | | | X | X | X | X | X | X | X | | X | X | X |

Legend :

- Energized
- Energized or De-energized
- X — De-energized
- M — Must be Energized by end of Phase
- F — Must be De-energized by end of Phase

See the first pages of Section 3-3 for notes.

## Gas Train : Pilot Gp2

| | Parameter *ProgramStop* | | | | | | | | | | PS | | PS | | PS | | PS | | PS | | PS | | | | PS | | PS | | | | | |
|---|---|---|---|---|---|---|---|---|---|---|---|---|---|---|---|---|---|---|---|---|---|---|---|---|---|---|---|---|---|---|---|---|
| | | | Lockout Phase | Safety Phase | Home Run Position | Burner Standby | Safety Relay = ON | Release of Startup SV = ON | Combustion Fan = ON | Drive to Prepurge Pos. | Prepurge | | Prepurge (Aux 3 Drive to Prepurge Pos.) | Prepurge 2 (Aux 3 FGR) | Drive to Ignition Pos. | Preignition (Spark) = ON | Pilot Valve = ON | Ignition (Spark) = OFF | Interval 1 (Pilot Stabilization) | Safety Time 2 | Interval 2 (Main Stabilization) | Drive to Low Fire Pos. | Operation 1 (Normal Operation) | Operation 2 (Driving to Low Fire) | | Afterburn Time | Driving to Postpurge Position | Mandatory Postpurge 1 | Optional Postpurge 3 | Direct Start | | Evacuate | Atmospheric Test | Fill | Pressure Test |
| | | Phase | 00 | 01 | 10 | 12 | 20 | 21 | 22 | 24 | 30 | | 32 | 34 | 36 | 38 | 40 | 42 | 44 | 50 | 52 | 54 | 60 | 62 | | 70 | 72 | 74 | 76 | 78 | 79 | | 80 | 81 | 82 | 83 |
| | | | | | | | START-UP | | | | | | | | | | | | | | | | OPER-ATION | | | SHUTDOWN | | | | | | GAS VALVE PROVING | | | |
| | Terminal | Description | Notes | | | | | | | | | PURGE | | | | | SAFETY TIME 1 | | | | | | | | | | | | | | | | | |
| INPUTS | X4-01.1 | Fuel Select Gas | Note 1 | | | | M | | | | | | | | | | | | | | | | | | | | | | | | | | | |
| | X3-04.1 | Safety Loop (Limits) | | | | | | | | | | | | | | | | | | | | | | | | | | | | | | | | |
| | X5-03.1 | ON / OFF Switch | Note 2 | | | | | | | | | | | | | | | | | | | | | | | | | | | | | | | |
| | N/A | Flame Signal | Note 9 | | | X | X | X | X | X | X | X | X | X | X | X | M | | | | | | | | F | X | X | X | X | X | X | X | X | X |
| | X3-02.1 | Blower Air SW (APS) | Note 8 | | | F | | X | X | | M | | | | | | | | | | | | | | | | | | | | | | | |
| | X4-01.3 | Blower Aux. Contact (FCC) | | | | | X | X | X | | M | | | | | | | | | | | | | | | | | | | | | | | |
| | | FGR Press. SW (instead of FCC) | Note 15 | | | | X | X | X | | M | | | | | | | | | | | | | | | | | | | | | | | |
| | X9-03.2 | POC SW Gas (CPI) | | | | | | | | | | | | | | | | | | | F | X | X | X | M | | | | | | | | | |
| | | POC SW Oil (CPI) | | | | | | | | | | | | | | | | | | | | | | | | | | | | | | | | |
| | | POC SW Gas + Oil (CPI) | | | | | | | | | | | | | | | | | | | F | X | X | X | M | | | | | | | | | |
| | | Press. SW Valve Proving | | | | | | | | | | | | | | | | | | | | | | | | | | | | | | | F | X |
| | X9-03.4 | Low Gas Press SW | | | | | | M | | | | | | | | | | | | | | | | | | | | | | | | | | |
| | X7-03.2 | POC SW Gas (CPI) | | | | | | | | | | | | | | | | | | | F | X | X | X | M | | | | | | | | | |
| | | POC SW Oil (CPI) | | | | | | | | | | | | | | | | | | | | | | | | | | | | | | | | |
| | | POC SW Gas + Oil (CPI) | | | | | | | | | | | | | | | | | | | F | X | X | X | M | | | | | | | | | |
| | | Start Release Gas | | | | | | M | | | | | | | | | | | | | | | | | | | | | | | | | | |
| | X9-03.3 | High Gas Pressure SW | | | | | | | | | | | | | | | | | | | | | | | | | | | | | | | | |
| | X6-01.3 | External Flame Safeguard | Note 9 | | | X | X | X | X | X | X | X | X | X | X | X | M | | | | | | | | F | X | X | X | X | X | X | X | X | X |
| | X6-01.1 | Ext. Flame SG Red. Contact | Note 9 | | | | | | | | | | | | | | F | X | X | X | X | X | X | X | M | | | | | | | | | |
| OUTPUTS | X3-01.1 | Fan | Note 12 | See Note 12 | | | | | | | | | | | | | | | | | | | | | | | | | | | | | | |
| | X4-02.3 | Ignition | | X | X | X | X | X | X | X | X | X | X | X | X | | | X | X | X | X | X | X | X | X | X | X | X | X | X | X | X | X | X |
| | X4-03.3 | Start Signal | | X | X | X | X | X | | | | | | | | | | | | | | | | | | | | | | | | | | |
| | | 3 Way Valve (APS checking) | Note 10 | X | X | X | X | X | X | X | X | X | X | X | X | X | X | X | X | X | X | X | X | X | X | | | | | | | X | X | X | X |
| | | 3 Way Valve (APS checking) INV. | Note 10 | | | X | X | X | X | | | | | | | | | | | | | | | | | | | | | | | X | | | |
| | X3-01.2 | Alarm | Note 3 | | X | X | | X | X | X | X | X | X | X | X | X | X | X | X | X | X | X | X | X | X | X | X | X | X | X | X | X | X | X | X |
| | X9-01.1 | Gas Valve SV (Usually Outdoor) | | X | X | X | X | X | | | | | | | | | | | | | | | | | | X | X | X | X | X | X | | | | |
| | X9-01.2 | Gas Valve PV (Pilot Valve) | Note 4 | X | X | X | X | X | X | X | X | X | X | X | X | X | | | | | X | X | X | X | X | X | X | X | X | X | X | X | X | X | X |
| | X8-01.1 | Main Fuel Indicator (Gas) | | X | X | X | X | X | X | X | X | X | X | X | X | X | X | X | X | | | | | | | X | X | X | X | X | X | X | X | | X |
| | X9-01.4 | Gas Valve V1 (Main, upstream) | | X | X | X | X | X | X | X | X | X | X | X | X | X | X | X | X | | | | | | | X | X | X | X | X | X | X | X | | X |
| | X9-01.3 | Gas Valve V2 (Main, downstream) | | X | X | X | X | X | X | X | X | X | X | X | X | X | X | X | X | | | | | | | X | X | X | X | X | X | | X | X | X |

Start-up valve proving, if used. See sequence diagram phases 80 to 83.

Shutdown valve proving, if used. See sequence diagram phases 80 to 83.

Legend :

- Energized
- Energized or De-energized
- X — De-energized
- M — Must be Energized by end of Phase
- F — Must be De-energized by end of Phase

See the first pages of Section 3-3 for notes.

## Oil Train : LightOilLO HeavyOilHO

| | Parameter *ProgramStop* | | | | | | | | | PS | | PS | | PS | | | | PS | | | | | PS | | PS | | |
|---|---|---|---|---|---|---|---|---|---|---|---|---|---|---|---|---|---|---|---|---|---|---|---|---|---|---|---|
| | | | Lockout Phase | Safety Phase | Home Run Position | Burner Standby | Safety Relay = ON | Release of Startup, SV = ON | Combustion Fan = ON | Drive to Prepurge Pos. | Prepurge | Prepurge (Aux 3 Drive to Prepurge Pos.) | Prepurge 2 (Aux 3 FGR) | Drive to Ignition Pos. | Preignition (Spark) = ON | Main Valve = ON | Ignition (Spark) = OFF | Interval 1 (Main Stabilization) | Drive to Low Fire Pos. | Operation 1 (Normal Operation) | Operation 2 (Driving to Low Fire) | Afterburn Time | Driving to Postpurge Position | Mandatory Postpurge 1 | Optional Postpurge 3 | Direct Start |
| | | Phase | 00 | 01 | 10 | 12 | 20 | 21 | 22 | 24 | 30 | 32 | 34 | 36 | 38 | 40 | 42 | 44 | 54 | 60 | 62 | 70 | 72 | 74 | 76 | 78 | 79 |
| | | | | | | | START-UP | | | | | | | | | | | | | OPER-ATION | | SHUTDOWN | | | | | |
| | Terminal | Description | Notes | | | | | | | | PURGE | | | | | SAFETY TIME 1 | | | | | | | | | | | |
| INPUTS | X4-01.2 | Fuel Select Oil | Note 1 | | | | M | | | | | | | | | | | | | | | | | | | | |
| | X3-04.1 | Safety Loop (Limits) | | | | | | | | | | | | | | | | | | | | | | | | | |
| | X5-03.1 | ON / OFF Switch | Note 2 | | | | | | | | | | | | | | | | | | | | | | | | |
| | N/A | Flame Signal | Note 9 | | | X | X | X | X | X | X | X | X | X | X | M | | | | | | F | X | X | X | X | X |
| | X3-02.1 | Blower Air SW (APS) | Note 8 | | | F | | X | X | | M | | | | | | | | | | | | | | | | |
| | X4-01.3 | Blower Aux. Contact (FCC) | | | | | X | X | X | | M | | | | | | | | | | | | | | | | |
| | | FGR Press. SW (instead of FCC) | Note 15 | | | | X | X | X | | M | | | | | | | | | | | | | | | | |
| | X9-03.2 | POC SW Gas (CPI) | | | | | | | | | | | | | | | | | | | | | | | | | |
| | | POC SW Oil (CPI) | | | | | | | | | | | | | | | | F | X | X | X | M | | | | | |
| | | POC SW Gas + Oil (CPI) | | | | | | | | | | | | | | | | F | X | X | X | M | | | | | |
| | X7-03.2 | POC SW Gas (CPI) | | | | | | | | | | | | | | | | | | | | | | | | | |
| | | POC SW Oil (CPI) | | | | | | | | | | | | | | | | F | X | X | X | M | | | | | |
| | | POC SW Gas + Oil (CPI) | | | | | | | | | | | | | | | | F | X | X | X | M | | | | | |
| | X6-01.1 | Start Rel. Oil (Atom. Media PS) | | | | | | M | | | | | | | | | | | | | | | | | | | |
| | X5-02.2 | High Oil Press SW | | | | | | M | | | | | | | | | | | | | | | | | | | |
| | X5-01.2 | Low Oil Press SW (activated) | | | | | | | | | | | | | M | | | | | | | | | | | | |
| | | Low Oil Press SW (act from ts) | | | | | | | | | | | | | | M | | | | | | | | | | | |
| | X6-01.3 | External Flame Safeguard | Note 9 | | | X | X | X | X | X | X | X | X | X | X | M | | | | | | F | X | X | X | X | X |
| | X6-01.1 | Ext. Flame SG Red. Contact | Note 9 | | | | | | | | | | | | | F | X | X | X | X | X | M | | | | | |
| OUTPUTS | X3-01.1 | Fan | Note 12 | See Note 12 | | | | | | | | | | | | | | | | | | | | | | | |
| | X4-02.3 | Ignition | Note 14 | X | X | X | X | X | X | See Note 14 | | | | | | | X | X | X | X | X | X | X | X | X | X | X |
| | X6-02.3 | Oil Pump Motor Starter | Note 6 | X | X | X | X | X | X | See Note 6 | | | | | | | | | | | | X | X | X | X | X | X |
| | X4-03.3 | Start Signal | | X | X | X | X | X | | | | | | | | | | | | | | | | | | | |
| | | 3 Way Valve (APS checking) | Note 10 | X | X | X | X | X | X | X | X | X | X | X | X | X | X | X | X | X | X | X | X | X | X | X | |
| | | 3 Way Valve (APS checking) INV. | Note 10 | | | X | X | X | X | | | | | | | | | | | | | | | | | | X |
| | X3-01.2 | Alarm | Note 3 | | X | X | | X | X | X | X | X | X | X | X | X | X | X | X | X | X | X | X | X | X | X | X |
| | X6-03.3 | Oil Valve SV (or Atom. Media) | | X | X | X | X | X | | | | | | | | | | | | | | | X | X | X | X | X |
| | X8-01.2 | Main Fuel Indicator (Oil) | | X | X | X | X | X | X | X | X | X | X | X | X | X | | | | | | X | X | X | X | X | X |
| | X8-02.1 | Oil Valve V1 (Main) | | X | X | X | X | X | X | X | X | X | X | X | X | X | | | | | | X | X | X | X | X | X |
| | X8-03.1 | Oil Valve V1 (Main) | | X | X | X | X | X | X | X | X | X | X | X | X | X | | | | | | X | X | X | X | X | X |
| | X7-01.3 | Oil Valve V2 (Staged, load depen.) | | X | X | X | X | X | X | X | X | X | X | X | X | X | X | X | X | | X | X | X | X | X | X | X |
| | X7-02.3 | Oil Valve V3 (Staged, load depen.) | | X | X | X | X | X | X | X | X | X | X | X | X | X | X | X | X | | X | X | X | X | X | X | X |

Legend :
- Energized
- Energized or De-energized
- X — De-energized
- M — Must be Energized by end of Phase
- F — Must be De-energized by end of Phase

See the first pages of Section 3-3 for notes.

## Oil Train : LO w Gasp

| | Terminal | Description | Notes | Lockout Phase | Safety Phase | Home Run Position | Burner Standby | Safety Relay = ON | Release of Startup, SV = ON | Combustion Fan = ON | Drive to Prepurge Pos. | Prepurge | Prepurge (Aux 3 Drive to Prepurge Pos.) | Prepurge 2 (Aux 3 FGR) | Drive to Ignition Pos. | Preignition (Spark) = ON | Pilot Valve = ON | Ignition (Spark) = OFF | Interval 1 (Pilot Stabilization) | Safety Time 2 | Interval 2 (Main Stabilization) | Drive to Low Fire Pos. | Operation 1 (Normal Operation) | Operation 2 (Driving to Low Fire) | Afterburn Time | Driving to Postpurge Position | Mandatory Postpurge 1 | Optional Postpurge 3 | Direct Start |
|---|---|---|---|---|---|---|---|---|---|---|---|---|---|---|---|---|---|---|---|---|---|---|---|---|---|---|---|---|---|
| | Parameter *ProgramStop* | | | | | | | | | | PS | | PS | | PS | | | | PS | | PS | | | | | PS | PS | | | |
| | Phase | | 00 | 01 | 10 | 12 | 20 | 21 | 22 | 24 | 30 | 32 | 34 | 36 | 38 | 40 | 42 | 44 | 50 | 52 | 54 | 60 | 62 | 70 | 72 | 74 | 76 | 78 | 79 |
| | | | | | | | START-UP | | | | | | | | | | | | | | | OPER-ATION | | SHUTDOWN | | | | | |
| | | | | | | | | | | | PURGE | | | | | SAFETY TIME 1 | | | | | | | | | | | | | | |
| INPUTS | X4-01.2 | Fuel Select Oil | Note 1 | | | | M | | | | | | | | | | | | | | | | | | | | | | |
| | X3-04.1 | Safety Loop (Limits) | | | | | | | | | | | | | | | | | | | | | | | | | | | |
| | X5-03.1 | ON / OFF Switch | Note 2 | | | | | | | | | | | | | | | | | | | | | | | | | | |
| | N/A | Flame Signal | Note 9 | | | X | X | X | X | X | X | X | X | X | X | X | M | | | | | | | F | X | X | X | X | X |
| | X3-02.1 | Blower Air SW (APS) | Note 8 | | | F | | X | X | M | | | | | | | | | | | | | | | | | | | |
| | X4-01.3 | Blower Aux. Contact (FCC) | | | | | X | X | X | M | | | | | | | | | | | | | | | | | | | |
| | | FGR Press. SW (instead of FCC) | Note 15 | | | | X | X | X | M | | | | | | | | | | | | | | | | | | | |
| | X9-03.2 | POC SW Gas (CPI) | | | | | | | | | | | | | | | | | | | | | | | | | | | |
| | | POC SW Oil (CPI) | | | | | | | | | | | | | | | | | | F | X | X | X | M | | | | | |
| | | POC SW Gas + Oil (CPI) | | | | | | | | | | | | | | | | | | F | X | X | X | M | | | | | |
| | X9-03.4 | Low Gas Press SW | Note 5 | | | | | M | | | | | | | | | | | | | | | | | | | | | |
| | X7-03.2 | POC SW Gas (CPI) | | | | | | | | | | | | | | | | | | | | | | | | | | | |
| | | POC SW Oil (CPI) | | | | | | | | | | | | | | | | | | F | X | X | X | M | | | | | |
| | | POC SW Gas + Oil (CPI) | | | | | | | | | | | | | | | | | | F | X | X | X | M | | | | | |
| | X6-01.1 | Start Rel. Oil (Atom. Media PS) | | | | | | M | | | | | | | | | | | | | | | | | | | | | |
| | X5-02.2 | High Oil Press SW | | | | | | M | | | | | | | | | | | | | | | | | | | | | |
| | X5-01.2 | Low Oil Press SW (activated) | | | | | | | | | | | | | M | | | | | | | | | | | | | | |
| | | Low Oil Press SW (act from ts) | | | | | | | | | | | | | | M | | | | | | | | | | | | | |
| | X6-01.3 | External Flame Safeguard | Note 9 | | | X | X | X | X | X | X | X | X | X | X | X | M | | | | | | | F | X | X | X | X | X |
| | X6-01.1 | Ext. Flame SG Red. Contact | Note 9 | | | | | | | | | | | | | | F | X | X | X | X | X | X | M | | | | | |
| OUTPUTS | X3-01.1 | Fan | Note 12 | See Note 12 | | | | | | | | | | | | | | | | | | | | | | | | | |
| | X4-02.3 | Ignition | | X | X | X | X | X | X | X | X | X | X | X | X | | | X | X | X | X | X | X | X | X | X | X | X | X | X |
| | X6-02.3 | Oil Pump Motor Starter | Note 6 | X | X | X | X | X | X | See Note 6 | | | | | | | | | | | | | | X | X | X | X | X | X |
| | X4-03.3 | Start Signal | | X | X | X | X | X | | | | | | | | | | | | | | | | | | | | | |
| | | 3 Way Valve (APS checking) | Note 10 | X | X | X | X | X | X | X | X | X | X | X | X | X | X | X | X | X | X | X | X | X | X | X | X | X | X | |
| | | 3 Way Valve (APS checking) INV. | Note 10 | | | X | X | X | X | | | | | | | | | | | | | | | | | | | | | X |
| | X3-01.2 | Alarm | Note 3 | | X | X | | X | X | X | X | X | X | X | X | X | X | X | X | X | X | X | X | X | X | X | X | X | X | X |
| | X6-03.3 | Oil Valve SV (or Atom. Media) | | X | X | X | X | X | | | | | | | | | | | | | | | | | X | X | X | X | X |
| | X9-01.1 | Gas Valve SV (Usually Outdoor) | | X | X | X | X | X | | | | | | | | | | | | | X | X | X | X | X | X | X | X | X |
| | X9-01.2 | Gas Valve PV (Pilot Valve) | Note 4 | X | X | X | X | X | X | X | X | X | X | X | X | X | | | | | X | X | X | X | X | X | X | X | X |
| | X8-01.2 | Main Fuel Indicator (Oil) | | X | X | X | X | X | X | X | X | X | X | X | X | X | X | X | X | | | | | | X | X | X | X | X | X |
| | X8-02.1 | Oil Valve V1 (Main) | | X | X | X | X | X | X | X | X | X | X | X | X | X | X | X | X | | | | | | X | X | X | X | X | X |
| | X8-03.1 | Oil Valve V1 (Main) | | X | X | X | X | X | X | X | X | X | X | X | X | X | X | X | X | | | | | | X | X | X | X | X | X |
| | X7-01.3 | Oil Valve V2 (Staged, load depen.) | | X | X | X | X | X | X | X | X | X | X | X | X | X | X | X | X | X | X | X | | X | X | X | X | X | X | X |
| | X7-02.3 | Oil Valve V3 (Staged, load depen.) | | X | X | X | X | X | X | X | X | X | X | X | X | X | X | X | X | X | X | X | | X | X | X | X | X | X | X |

Legend :

- Energized
- Energized or De-energized
- X — De-energized
- M — Must be Energized by end of Phase
- F — Must be De-energized by end of Phase

See the first pages of Section 3-3 for notes.

## Oil Train : HO w Gasp

| | Terminal | Description | Notes | Lockout Phase | Safety Phase | Home Run Position | Burner Standby | Safety Relay = ON | Release of Startup, SV = ON | Combustion Fan = ON | Drive to Prepurge Pos. | Prepurge | Prepurge (Aux 3 Drive to Prepurge Pos.) | Prepurge 2 (Aux 3 FGR) | Drive to Ignition Pos. | Preignition (Spark) = ON | Pilot Valve = ON | Ignition (Spark) = OFF | Interval 1 (Pilot Stabilization) | Safety Time 2 | Interval 2 (Main Stabilization) | Drive to Low Fire Pos. | Operation 1 (Normal Operation) | Operation 2 (Driving to Low Fire) | Afterburn Time | Driving to Postpurge Position | Mandatory Postpurge 1 | Optional Postpurge 3 | Direct Start |
|---|---|---|---|---|---|---|---|---|---|---|---|---|---|---|---|---|---|---|---|---|---|---|---|---|---|---|---|---|---|
| | Parameter *ProgramStop* | | | | | | | | | | PS | | PS | | PS | | | | PS | | PS | | | | | PS | | PS | | |
| | Phase | | 00 | 01 | 10 | 12 | 20 | 21 | 22 | 24 | 30 | 32 | 34 | 36 | 38 | 40 | 42 | 44 | 50 | 52 | 54 | 60 | 62 | 70 | 72 | 74 | 76 | 78 | 79 |
| | | | | | | | START-UP | | | | | | | | | | | | | | | OPER-ATION | | SHUTDOWN | | | | | |
| | | | | | | | | | | | PURGE | | | | | SAFETY TIME 1 | | | | | | | | | | | | | | |
| INPUTS | X4-01.2 | Fuel Select Oil | Note 1 | | | | M | | | | | | | | | | | | | | | | | | | | | | |
| | X3-04.1 | Safety Loop (Limits) | | | | | | | | | | | | | | | | | | | | | | | | | | | |
| | N/A | Internal Temperature Limit | | | | | | | | | | | | | | | | | | | | | | | | | | | |
| | X5-03.1 | ON / OFF Switch | Note 2 | | | | | | | | | | | | | | | | | | | | | | | | | | |
| | N/A | Flame Signal | Note 9 | | | X | X | X | X | X | X | X | X | X | X | X | M | | | | | | | F | X | X | X | X | X |
| | X3-02.1 | Blower Air SW (APS) | Note 8 | | | F | | X | X | | M | | | | | | | | | | | | | | | | | | |
| | X4-01.3 | Blower Aux. Contact (FCC) | | | | | X | X | X | | M | | | | | | | | | | | | | | | | | | | |
| | | FGR Press. SW (instead of FCC) | Note 15 | | | | X | X | X | | M | | | | | | | | | | | | | | | | | | | |
| | X9-03.2 | POC SW Gas (CPI) | | | | | | | | | | | | | | | | | | | | | | | | | | | |
| | | POC SW Oil (CPI) | | | | | | | | | | | | | | | | | | | F | X | X | X | M | | | | | |
| | | POC SW Gas + Oil (CPI) | | | | | | | | | | | | | | | | | | | F | X | X | X | M | | | | | |
| | X9-03.4 | Low Gas Press SW | Note 5 | | | | | M | | | | | | | | | | | | | | | | | | | | | | |
| | X7-03.2 | POC SW Gas (CPI) | | | | | | | | | | | | | | | | | | | | | | | | | | | | |
| | | POC SW Oil (CPI) | | | | | | | | | | | | | | | | | | | F | X | X | X | M | | | | | |
| | | POC SW Gas + Oil (CPI) | | | | | | | | | | | | | | | | | | | F | X | X | X | M | | | | | |
| | X6-01.1 | Start Rel. Oil (Atom. Media PS) | | | | | | M | | | | | | | | | | | | | | | | | | | | | | |
| | | Ext. Flame SG Red. Contact | Note 9 | | | | | | | | | | | | | F | X | X | X | X | X | X | X | M | | | | | |
| | X6-01.3 | Heavy Oil Direct Start | Note 16 | | | | | See Note 16 | | | | | | | | | | | | | | | | | | | | | |
| | | External Flame Safeguard | Note 9 | | | X | X | X | X | X | X | X | X | X | X | X | M | | | | | | | F | X | X | X | X | X |
| | X5-02.2 | High Oil Press SW | | | | | | | M | | | | | | | | | | | | | | | | | | | | | |
| | X5-01.2 | Low Oil Press SW (activated) | | | | | | | | | | | | | | M | | | | | | | | | | | | | | |
| | | Low Oil Press SW (act from ts) | | | | | | | | | | | | | | | M | | | | | | | | | | | | | |
| OUTPUTS | X3-01.1 | Fan | Note 12 | See Note 12 | | | | | | | | | | | | | | | | | | | | | | | | | |
| | X4-02.3 | Ignition | | X | X | X | X | X | X | X | X | X | X | X | X | | | X | X | X | X | X | X | X | X | X | X | X | X | X |
| | X6-02.3 | Oil Pump Motor Starter | Note 6 | X | X | X | X | X | X | See Note 6 | | | | | | | | | | | | | | | X | X | X | X | X | X |
| | X4-03.3 | Start Signal | | X | X | X | X | X | | | | | | | | | | | | | | | | | | | | | | |
| | | 3 Way Valve (APS checking) | Note 10 | X | X | X | X | X | X | X | X | X | X | X | X | X | X | X | X | X | X | X | X | X | X | X | X | X | X | |
| | | 3 Way Valve (APS checking) INV. | Note 10 | | | X | X | X | X | | | | | | | | | | | | | | | | | | | | | X |
| | X3-01.2 | Alarm | Note 3 | | X | X | | X | X | X | X | X | X | X | X | X | X | X | X | X | X | X | X | X | X | X | X | X | X | X |
| | X6-03.3 | Oil Valve SV (or Atom. Media) | | X | X | X | X | X | | | | | | | | | | | | | | | | | | X | X | X | X | X |
| | X9-01.1 | Gas Valve SV (Usually Outdoor) | | X | X | X | X | X | X | X | X | X | X | X | X | X | | | | | | X | X | X | X | X | X | X | X | X |
| | X9-01.2 | Gas Valve PV (Pilot Valve) | Note 4 | X | X | X | X | X | X | X | X | X | X | X | X | X | | | | | | X | X | X | X | X | X | X | X | X |
| | X8-01.2 | Main Fuel Indicator (Oil) | | X | X | X | X | X | X | X | X | X | X | X | X | X | X | X | | | | | | | X | X | X | X | X | X |
| | X8-02.1 | Oil Valve V1 (Main) | | X | X | X | X | X | X | X | X | X | X | X | X | X | X | X | | | | | | | X | X | X | X | X | X |
| | X8-03.1 | Oil Valve V1 (Main) | | X | X | X | X | X | X | X | X | X | X | X | X | X | X | X | | | | | | | X | X | X | X | X | X |
| | X7-01.3 | Oil Valve V2 | | X | X | X | X | X | X | X | X | X | X | X | X | X | X | X | X | | | | | X | X | X | X | X | X | X | X |
| | X7-02.3 | Oil Valve V3 (Staged, load depen.) | | X | X | X | X | X | X | X | X | X | X | X | X | X | X | X | X | X | X | X | | X | X | X | X | X | X | X | X |

Legend :

- Energized
- Energized or De-energized
- X — De-energized
- M — Must be Energized by end of Phase
- F — Must be De-energized by end of Phase

See the first pages of Section 3-3 for notes.

## Actuators

| Parameter*ProgramStop* | | | | | | | | | | PS | | PS | | PS | | | | PS | | PS | | | | PS | | PS | | | | | |
|---|---|---|---|---|---|---|---|---|---|---|---|---|---|---|---|---|---|---|---|---|---|---|---|---|---|---|---|---|---|---|---|
| | | Lockout Phase | Safety Phase | Home Run Pos. | Burner Standby | Safety Relay = ON | Release of startup, Safety Valve = ON | Comb. Fan = ON | Drive to Purge Pos. | Prepurge | | Prepurge 2 (FGR) | Drive to Ignition Pos. | Preignition (Spark) = ON | Pilot Valve = ON | Ign. (Spark)= OFF | Interval 1 (Pilot Stabilization) | Safety Time 2 | Interval 2 (Main Stabilization) | Drive to Low Fire Pos. | Operation 1 (Norm. Operation) | Operation 2 (Driving to L. Fire) | Afterburn Time | Driving to Postpurge Pos. | Mandatory Postpurge 1 | | Optional Postpurge 3 | Direct Start | | Evacuate | Atmospheric Test | Fill | Pressure Test |
| | Phase | 00 | 01 | 10 | 12 | 20 | 21 | 22 | 24 | 30 | 32 | 34 | 36 | 38 | 40 | 42 | 44 | 50 | 52 | 54 | 60 | 62 | 70 | 72 | 74 | 76 | 78 | 79 | | 80 | 81 | 82 | 83 |
| | | | | | | START-UP | | | | | | | | | | | | | | | OPER-ATION | | SHUTDOWN | | | | | | | GAS VALVE PROVING | | | |
| Actuator | Description | Notes | | | | | | | | | PRE-PURGE | | | | SAFETY TIME 1 | | | | | | | | | | | POST-PURGE | | | | | | |
| Air, Aux 1, Aux 2, VSD | Expected Position | Note 7 | U | | H | | | | T | PrP | | | T | I | | | | | | T | M | T | S | T | PsP | | | | See Note 7 | | | |
| | Position Required to Proceed | Note 13 | | | | | | | | | | | | | | | | | | | | | | | | | | | | | | |
| | Dynamic Position Checking | Note 13 | | | | | | | | | | | | | | | | | | | | | | | | | | | | | | |
| | Run-Time Position Checking | Note 13 | | | | | | | | | | | | | | | | | | | | | | | | | | | | | | |
| Gas / Oil or Oil | Expected Position | Note 7 | U | | H | | | | | | | | T | I | | | | | | T | M | T | S | T | PsP | | | | See Note 7 | | | |
| | Position Required to Proceed | Note 13 | | | | | | | | | | | | | | | | | | | | | | | | | | | | | | |
| | Dynamic Position Checking | Note 13 | | | | | | | | | | | | | | | | | | | | | | | | | | | | | | |
| | Run-Time Position Checking | Note 13 | | | | | | | | | | | | | | | | | | | | | | | | | | | | | | |
| Aux 3 | Expected Position | Note 7 | U | | H | | | | | | T | PrP | T | I | | | | | | T | M | T | S | H | | T | PsP | | See Note 7 | | | |
| | Position Required to Proceed | Note 13 | | | | | | | | | | | | | | | | | | | | | | | | | | | | | | |
| | Dynamic Position Checking | Note 13 | | | | | | | | | | | | | | | | | | | | | | | | | | | | | | |
| | Run-Time Position Checking | Note 13 | | | | | | | | | | | | | | | | | | | | | | | | | | | | | | |

Legend :

- Position checked by stated method
- Position not checked
- **U** Undefined position
- **H** Home position
- **T** Actuators transitioning
- **PrP** Prepurge position
- **I** Ignition position
- **M** Actuators modulating
- **S** Actuators stopped
- **PsP** Postpurge position

See the first pages of Section 3-3 for notes.

Intentionally Left Blank

Section 1 Overview

Section 2 Wiring

Section 3 Parameters

**Section 4 Commissioning**

Section 5 VSD

Section 6 $O_2$ Trim

Section 7 Troubleshooting

Section 8 Modbus

Section 9 ACS450

Section 10 Revision History

Appendix A Application Guide

Appendix B* Complimentary Products Guide

*Can be found at www.scccombustion.com.

HOME

Section 1 Overview

Section 2 Wiring

Section 3 Parameters

**Section 4 Commissioning**

Section 5 VSD

Section 6 $O_2$ Trim

Section 7 Troubleshooting

Section 8 Modbus

Section 9 ACS450

Section 10 Revision History

Appendix A Application Guide

Appendix B* Complimentary Products Guide

*Can be found at www.scccombustion.com.

HOME

# Section 4: Commissioning

**Table of Contents**

Pre-Requisites for Basic LMV51 Systems ..... 2
Pre-Requisites for LMV52 Systems with a VFD ..... 4
Pre-Requisites for LMV52 Systems with $O_2$ Trim ..... 5
Configuring (Parameterization of) an LMV5 with a Default Parameter Set ..... 6
Transferring Parameter Sets Using the AZL Display ..... 14
Suggested Initial Light-off for LMV5 Systems ..... 15
Suggested Ratio Control Curve Commissioning ..... 17
Suggested Load Control Setup ..... 22
Suggested Cold Start (Thermal Shock Protection) Setup ..... 24
Additional Tips for Commissioning ..... 28
Special Features and Settings ..... 30

Before the LMV5 can be commissioned, certain pre-requisites must be met for the LMV5 control, the burner, the boiler, and the boiler room. Experience has shown that if the points below are addressed properly, commissioning will be safe, timely, and trouble-free.

**Pre-Requisites for Basic LMV51 Systems**

1. Burner / boiler must be in "good" condition. Burner firing head must be correct for the boiler and the firing head must not be cracked, melted, or otherwise damaged. Other items to check include:

    a. Flame scanner tube must sight pilot and main flame correctly.

    b. Refractory should not interfere with the flame scanner sighting or the flame path of the burner.

    c. For fire tube boilers, the flame should not impinge on the Morrison tube.

2. All LMV5 components (base unit, actuators, flame scanners, etc.) are mounted properly. Please see Section 1 (Overview) and Appendix B (LMV5 Accessories Guide) for mounting details. Particular attention should be paid to the following:

    a. Actuator shaft couplings must accomplish the following:

        i. Compensate for both angular and parallel shaft misalignment generated by the mounting bracket.

        ii. Have little or no backlash.

        iii. Be robust enough to absorb the stall torque of the actuator without damage.

    Solid (rigid) shaft couplings are not acceptable in most applications. Clamp-type couplings that have a D-shape or keyway are preferred since these will not damage the actuator shaft and do provide positive engagement. In linkage-less applications, actuator couplings should be considered to be safety-related components.

    **NOTE: Do not couple actuator to valve / damper shaft until actuator is addressed, the direction of rotation for the actuator is set, and the LMV5 alarm is reset. This is outlined later in the commissioning section.**

    b. Actuator brackets must be rigid enough so that they do not amplify burner vibration (diving board effect) or distort significantly when the actuator is applying maximum torque to the valve / damper shaft.

c. When actuator is installed and coupled, ensure that all mounting hardware is tightened adequately, and some method of thread locking is employed on the mounting hardware (except for the coupling hardware).

d. Ensure environmental conditions (temperature, vibration, moisture, etc.) are not exceeded.

3. Ensure that all wiring is per the applicable wiring diagram and also meets applicable local and national codes. Particular attention should be paid to the following:

e. If a step-down control transformer is the source of 120 VAC power for the LMV5, the ground and neutral should be bonded (connected) on the transformer.

f. Voltage supply to a 120 VAC LMV5 must be between 102 and 132 VAC, 47-63 Hz. Waveform must be a full sine wave.

g. The small transformer(s) used for the LMV5 (AGG5.210, typically blue or black) must be wired and grounded. See Section 2 (Wiring) for more details. Pay attention to pins 3 and 4 on terminal SEK2 and proper grounding. If more than two SQM48 and one SQM45 actuators are modulated at the same time, a second transformer (AGG5.210) will be required.

h. CANbus wire (AGG5.643) must be used to wire between actuators. Plain, shielded cable is not adequate and is not permitted.

i. Ensure that the last device and only the last device on the CANbus has the termination jumper in the “Bus Termination” position. See Section 2 (Wiring) for more details. The AZL has built-in termination.

4. Fuel (gas) supply must be adequate to support high fire operation and fuel (gas) train must be sized correctly.

j. Fuel (gas) pressure before the firing rate control valve must be correct, stable and repeatable at all firing rates and must not vary when other fuel (gas) burning appliances (other boilers in the building) are being operated.

k. The fuel (gas) pressure regulator on the burner being commissioned should not be fully open at high fire and should not be bouncing off the seat at low fire. Fuel regulator must be sized properly, and have adequate turndown capability.

5. A temporary stack gas analyzer that has been calibrated and at a minimum reads $O_2$ (%) and CO (ppm) must be used for setting combustion.

6. Knowledge of what fuel flow represents high fire of the burner / boiler combination and also the turndown of the burner / boiler combination. This can typically be found on the burner / boiler nameplate.

7. A method of determining firing rate (fuel flow within +/- 5%) should be used. This, in combination with knowledge of high fire and turndown, is used to set the load numbers on each curve point. An Excel spreadsheet is available for this purpose.

8. For steam boilers, the feedwater supply must be adequate to support high fire operation. Feedwater controls must be working properly.

9. The load on the boiler must be adequate so that a burner / boiler combination can be run at high fire for a minimum of 5 minutes.

**Pre-Requisites for LMV52 Systems with a VFD**

1. All pre-requisites of the Basic LMV51 system apply.

2. Blower motor speed sensor and speed wheel must be installed correctly. See Appendix B (LMV5 Accessories Guide) for more details.

3. Vector-type VFDs are highly recommended due to their inherently more precise motor speed control. Volt / Hz VFDs are not recommended due to less precise speed control.

4. Proper grounding between the LMV5, the VFD, and the motor must be installed. See Section 2 (Wiring) for more details.

5. VFD parameters must be set correctly to be compatible with both the LMV52 and the blower motor. See Section 5 (VSD) for more details. Particular attention should be paid to the following:

    a. Analog signal configuration. Both the LMV52 and VFD must be configured for a 4-20mA signal.

    b. Ramp rates between the LMV52 and the VFD must be compatible. In general, ramp rates of the VFD should be 10 seconds less than the LMV52.

    c. VFD must be set up as a slave unit for a 4-20mA signal. Damping, dead band, and PID functions must be disabled.

    d. The frequency (Hz) output of the drive must be directly proportional to the analog input signal.

    e. Acceleration / deceleration curves must be linear instead of "S-shaped".

    f. Ramp settings must be ramp up / ramp down instead of ramp up / coast down.

    g. Any type of damping or stall prevention in the VFD should be deactivated.

6. LMV52 / VFD combination must be “Standardized” before operation. See Section 5 (VSD) for more details.

    a. Verify that the air damper opens to pre-purge position before the blower is energized for standardization.

**Pre-Requisites for LMV52 Systems with O2 Trim**

1. All prerequisites of the Basic LMV51 system apply.

2. The $O_2$ sensor must be mounted correctly. See Appendix B (LMV5 Accessories Guide) for more details. Particular attention should be paid to the following:

    a. If the $O_2$ sensor cannot be installed per Appendix B (LMV5 Accessories Guide), contact SCC for assistance.

    b. The QGO20 $O_2$ sensor is not suited for most types of biogas or fuels that produce ash, such as #6 oil. Contact SCC for advice on the compatibility of uncommon fuels.

3. The $O_2$ sensor must be wired to the PLL52 correctly. See Section 2 (Wiring) for more details. Particular attention should be paid to the following:

    a. The PLL52 module must be within 30 feet of the $O_2$ sensor.

    b. Two conduits must be run between the QGO20 $O_2$ sensor and the PLL52 module. One conduit must contain the low voltage signals while the other conduit must contain the high voltage for the sensor heater.

4. The furnace pressure of the boiler being commissioned must be repeatable at a given firing rate. Repeatability of +/- 0.2 in WC at each firing rate is adequate.

5. A fuel flow meter or some means of determining the load (firing rate) to +/- 3% is required. A more accurate load number (+/- 3%) for each curve point is necessary for reliable $O_2$ trim functionality.

6. The LMV52 must be powered and configured for the QGO20 $O_2$ sensor for two hours prior to commissioning. This is done to let the QGO20 sensor heat up thoroughly.

7. The boiler must be up to normal operating temperature / pressure for at least one hour before commissioning the $O_2$ trim.

**Configuring (Parameterization of) an LMV5 with a Default Parameter Set**

The procedure below assumes an LMV5 with a default parameter set. If the LMV5 is mounted to a burner / boiler, the OEM(s) may have already changed the parameters from the default setting and parameterized the LMV5 for the application.

Section 3 (Parameters) gives a detailed explanation of all of the parameters in the LMV5, as well as highlights which parameters must be set (marked with a double asterisk **) and which parameters are frequently used (shaded).

This procedure gives a general guideline of what parameters need to be set to get an LMV5 running on a typical burner/ boiler. Every burner is different, so it is likely that every burner will need a somewhat unique parameter set to run correctly.

When an LMV5 with a default parameter set is powered up and wired correctly, it will go into alarm and state that "no fuel train is defined". During the parameterization, the alarm does not need to be reset. Moreover, the alarm will come back immediately until at least a few key parameters are set. The recommendation is to silence the alarm horn, and leave the LMV5 in a state of alarm until the key parameters are set.

1. Log in at the OEM password level. From the factory, the OEM password for the LMV5 is "START".

2. Set the Burner ID. This can be found in the main menu under *Updating.* The OEM password will be required when the *Updating* menu is entered. The Burner ID is a unique number which matches the burner to the parameter set in the LMV5. Typically, the serial number of the burner is used as the Burner ID.

3. Configure the load controller sensor (except LMV51.0…) using the following menu path:

   *Params & Display > LoadController > Configuration*

   The default configuration is for a hot water boiler (temperature control) with a PT100 RTD temperature sensor. For a steam boiler (pressure control), set the following parameters to the following settings:

   ***Sensor Select*** = PressSensor
   ***Ext Inp X61 U/I*** = 0..10V or 4..20mA (sensor dependent)
   ***MRangePressSens*** = High range of pressure sensor

4. Set the fuel train(s). If only gas is to be fired, only a gas fuel train must be selected. If only oil is to be fired, only an oil fuel train must be selected. For dual fuel burners, both a gas and oil fuel train must be selected. Fuel trains can be set using the following menu path:

   *Params & Display > BurnerControl > Configuration > ConfigGeneral*

   See the following pages for fuel train information. “Pilot Gp2” is typical for gas piloted gas burners and “LO w Gasp” is typical for gas piloted oil burners.

**Direct Spark Ignition**

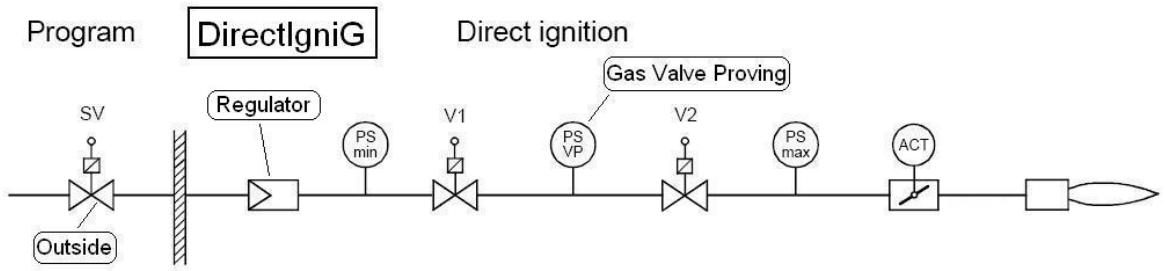


**Pilot Ignition (Pilot From Between Main Gas Valves V1 and V2)**

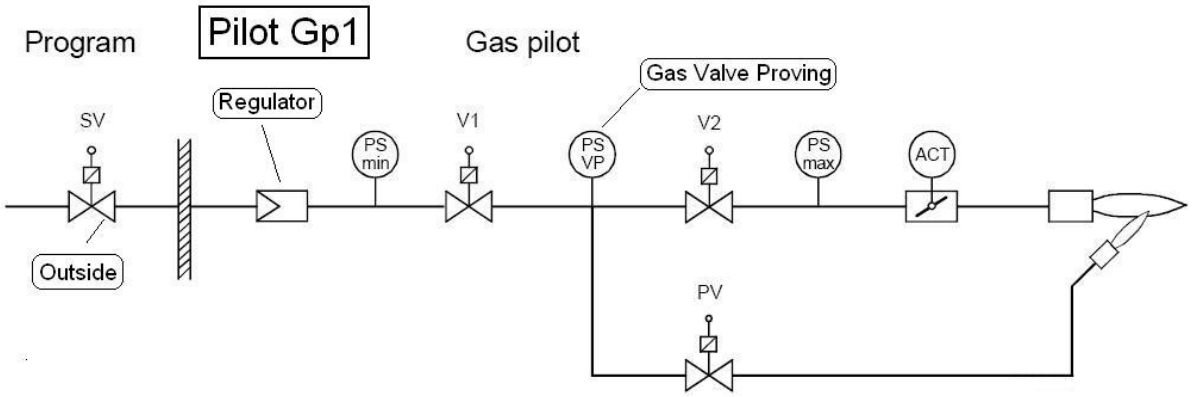


**Pilot Ignition (Pilot Before Main Gas Valves V1 and V2)**

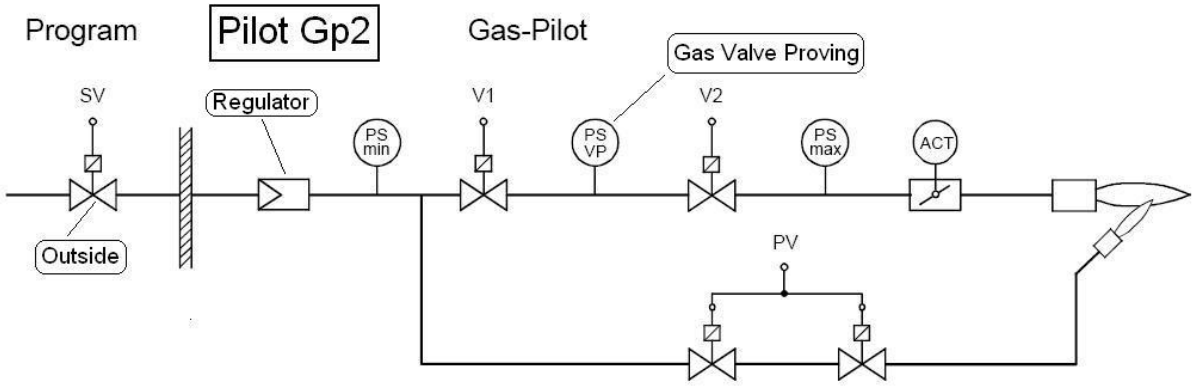


**Legend:**

| | | | |
|---|---|---|---|
| ACT = | Actuator | SV = | Shutoff (safety) valve |
| V1 = | Upstream gas valve (main) | PS = | Pressure switch |
| V2 = | Downstream gas valve (main) | VP = | Valve proving |
| PV = | Pilot valve | | |

| | Terminal | Description | Drive to Ignition Pos. | Preignition (SPARK) = ON | Pilot Valve = ON | IGN (SPARK) = OFF | Interval 1 (Pilot Stabilization) | **Safety Time 2** | Interval 2 (Main Stabilization) | Drive to Low Fire Pos. |
|---|---|---|---|---|---|---|---|---|---|---|
| | | | **36** | **38** | **40** | **42** | **44** | **50** | **52** | **54** |
| | | | | | **SAFETY TIME 1** | | | | | |
| **DirectIgniG** | **X4-02.3** | Ignition | | ■ | ■ | | | | | |
| | **X9-01.4** | Gas valve V1 (main valve, upstream) | | | ■ | ■ | ■ | ■ | ■ | ■ |
| | **X9-01.3** | Gas valve V2 (main valve, downstream) | | | ■ | ■ | ■ | ■ | ■ | ■ |
| **Pilot Gp1** | **X4-02.3** | Ignition | | ■ | ■ | | | | | |
| | **X9-01.1** | Gas valve SV (safety valve, usually outdoors) | ■ | ■ | ■ | ■ | ■ | ■ | ■ | ■ |
| | **X9-01.2** | Gas valve PV (pilot valve) | | | ■ | ■ | ■ | ■ | | |
| | **X9-01.4** | Gas valve V1 (main valve, upstream) | | | ■ | ■ | ■ | ■ | ■ | ■ |
| | **X9-01.3** | Gas valve V2 (main valve, downstream) | | | | | | ■ | ■ | ■ |
| **Pilot Gp2** | **X4-02.3** | Ignition | | ■ | ■ | | | | | |
| | **X9-01.1** | Gas valve SV (safety valve, usually outdoors) | ■ | ■ | ■ | ■ | ■ | ■ | ■ | ■ |
| | **X9-01.2** | Gas valve PV (pilot valve) | | | ■ | ■ | ■ | ■ | | |
| | **X9-01.4** | Gas valve V1 (main valve, upstream) | | | | | | ■ | ■ | ■ |
| | **X9-01.3** | Gas valve V2 (main valve, downstream) | | | | | | ■ | ■ | ■ |

**Figure 4-1: Fuel Train Sequences for Gas (shaded indicates energized)**

**Direct Spark Ignition for Light Oil, Single-stage or Multi-stage (other trains possible)**

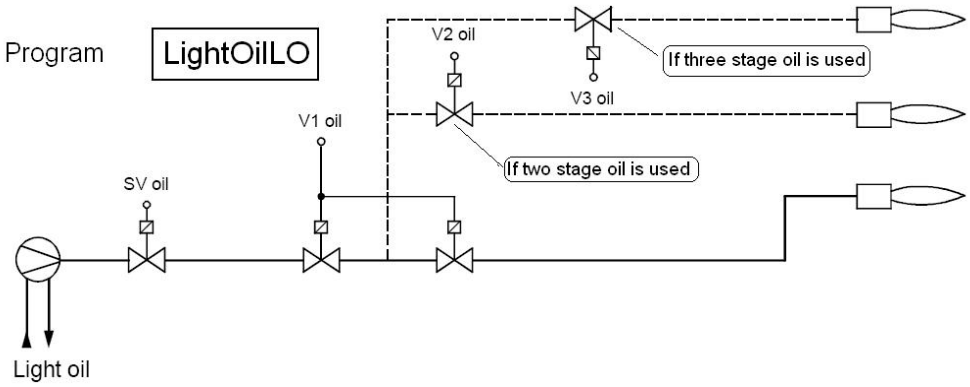


**Gas Pilot Ignition for Light Oil, Staged or Modulating (other trains possible)**

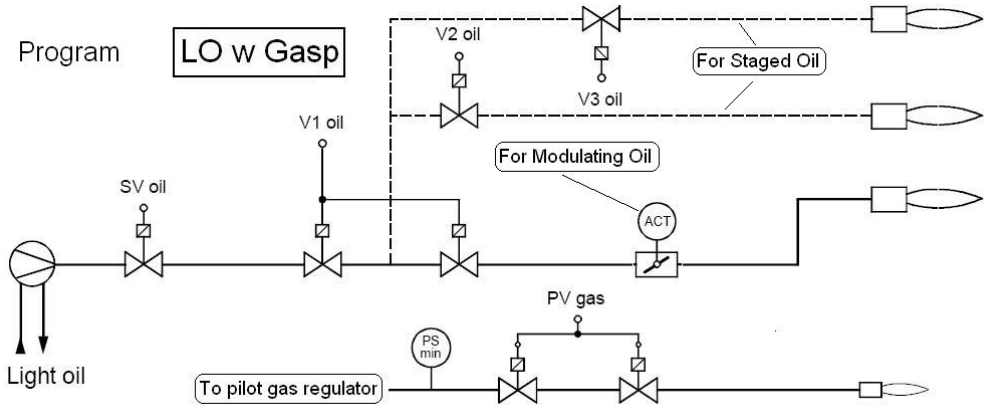


**Gas Pilot Ignition for Heavy Oil, Modulating (other trains possible)**

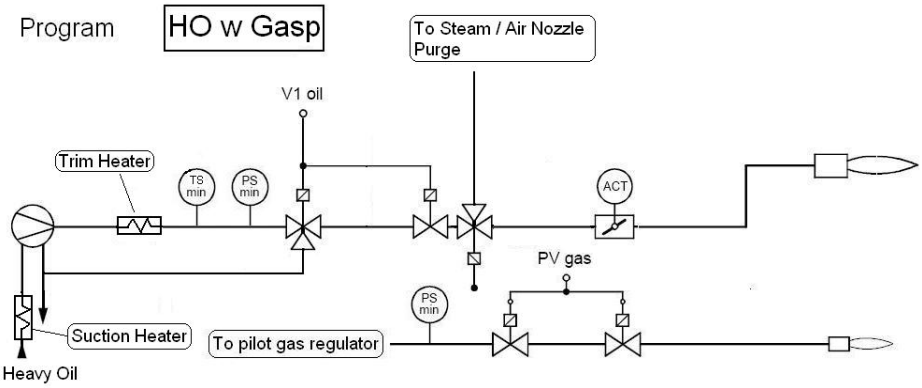


**Legend:**

| | | | |
|---|---|---|---|
| ACT = | Actuator | SV = | Shutoff (safety) valve |
| V1 = | Oil valves (main) | PS = | Pressure switch |
| V2 = | Stage 2 oil valve | PV = | Pilot valve |
| V3 = | Stage 3 oil valve | TS = | Temperature switch |

| | | | Drive to Ignition Pos. | Preignition (SPARK) = ON | Pilot Valve = ON | IGN (SPARK) = OFF | Interval 1 | **Safety Time 2** | Interval 2 (Main Stabilization) | Drive to Low Fire Pos. |
|---|---|---|---|---|---|---|---|---|---|---|
| | | | **36** | **38** | **40** | **42** | **44** | **50** | **52** | **54** |
| | **Terminal** | **Description** | | | **SAFETY TIME 1** | | | | | |
| **LightOilLO** | **X4-02.3** | Ignition | | | | | | | | |
| | **X8-02.1** | Oil valve V1 (main valve) | | | | | | | | |
| | **X8-03.1** | Oil valve V1 (main valve) | | | | | | | | |
| | | | | | | | | | | |
| **LO w Gasp** | **X4-02.3** | Ignition | | | | | | | | |
| | **X9-01.1** | Gas valve SV (safety valve, usually outdoors) | | | | | | | | |
| | **X9-01.2** | Gas valve PV (pilot valve) | | | | | | | | |
| | **X8-02.1** | Oil valve V1 (main valve) | | | | | | | | |
| | **X8-03.1** | Oil valve V1 (main valve) | | | | | | | | |
| | | | | | | | Safety Time 2 HO ONLY | | | |
| **HO w Gasp** | **X4-02.3** | Ignition | | | | | | | | |
| | **X9-01.1** | Gas valve SV (safety valve, usually outdoors) | | | | | | | | |
| | **X9-01.2** | Gas valve PV (pilot valve) | | | | | | | | |
| | **X8-02.1** | Oil valve V1 (main valve) | | | | | | | | |
| | **X8-03.1** | Oil valve V1 (main valve) | | | | | | | | |

**Figure 4-2: Fuel Train Sequences for Oil (shaded indicates energized)**

**NOTE: Depending on the direction of rotation, home position set in the LMV5, and whether the actuator is activated or deactivated, the actuator may rotate as soon as it is addressed. For this reason it is highly recommended that the actuator shaft be uncoupled from the valve / damper until the parameters pertaining to the above are set, and the initial LMV5 alarm is reset.**

5. Address the actuators. This is accomplished by the following steps:

   a. Remove the outer black cover of all actuators to be addressed. This is done by loosening the three Philips (Pozidriv) head screws on the cover and setting the cover aside.

   b. On the AZL, the menu path will be:

      *Params & Display > Actuators > Addressing*

      Note that when the "Params & Display" menu is entered, it may be necessary to enter the OEM or service level password.

   c. Select the actuator to be addressed. When prompted, press the "Enter" key to begin the addressing assignment.

   d. Press the red button on the appropriate actuator. If done correctly, the AZL should state that the address assignment was successful.

   e. Repeat the procedure above for the other actuators.

   f. The jumper must be set to "Bus termination" on the last device on the CANbus daisy chain. The last device could be an actuator or a PLL module.

   g. After all actuators are successfully addressed, the outer black covers can be reinstalled.

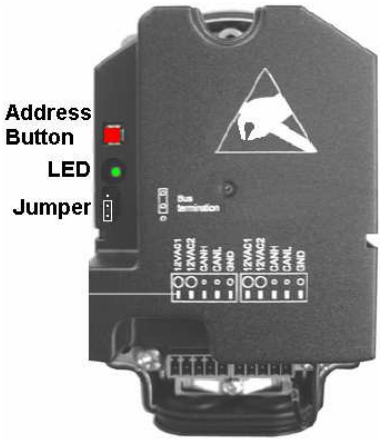


**Figure 4-3: Actuator with Cover Removed**

Additional information:

- When the actuator is wired correctly, powered up, and not addressed, the green LED should be a solid green, which indicates power and CANbus communication.
- When addressing is successful, the LED should blink a set number of times, pause and repeat. The number of blinks indicates how the actuator is addressed:
  1 = Air  2 = Gas / Oil  3 = Oil  4 = Aux 1
  5 = Aux 2  6 = Aux 3
- The actuator can be un-addressed by holding the red button for 8-10 seconds. A solid green LED will confirm this.
- If using an LMV52 and advanced FGR functions are needed, the FGR actuator must be addressed as the Aux 3 actuator.

6. Activate or deactivate the appropriate actuators / VSD. If the actuator / VSD is not present on the burner, it should be deactivated. If $O_2$ trim is to be used, set actuators that will influence airflow (typically air actuator and VSD if equipped) to "air influenced" instead of "activated". For dual fuel burners, this will need to be done for both fuels. The menu path to activate and deactivate actuators / VSD is:

   *Params & Display > RatioControl > Configuration > GasSettings* or *OilSettings*

7. For each actuator that has been addressed and activated, set the direction of rotation using the following menu path:

   *Params & Display > Actuators > DirectionRot*

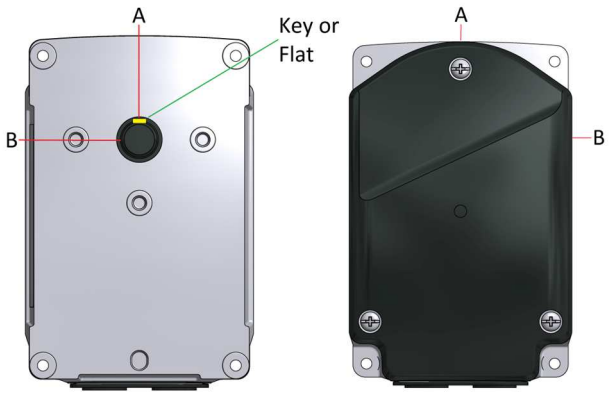


**Figure 4-4: Standard and Reversed Rotation**

a. **Standard Rotation** - Key or flat is at **A** when indicated actuator position is at 0 degrees. Key or flat will be at **B** when indicated actuator position is 90 degrees. This is how the actuator's shafts come from the factory.

b. **Reversed Rotation** - Key or flat is at **B** when indicated actuator position is at 0 degrees. Key or flat will be at **A** when indicated actuator position is 90 degrees.

**NOTE: Make sure that the direction of rotation is set correctly for all actuators at this time, including the oil actuator. If the direction of rotation must be changed later, the fuel-air ratio control curves must be deleted.**

8. At this point, the LMV5 alarm can be reset, provided that there is not a call for heat present (burner switch is off / X5-03.1 is not energized). Older LMV5 units also require the safety loop to be closed before the alarm can be reset. The reset can be accomplished via a remote reset button (if wired) or via the menu path:

   *OperationalStat > Status/Reset >* Press "ESC" then "ENTER" to reset

9. Set actuator home (standby) positions if necessary. Defaults are 0 degrees and 0% VSD. For dual fuel burners this will need to be done for both fuels. The menu path is:

   *Params & Display > RatioControl > GasSettings* or *OilSettings > SpecialPositions > HomePos*

10. Couple actuators to the valves / dampers. Actuators must not torque against mechanical stops on the valve / damper when at home position. Adjust home positions if necessary.

    **NOTE: Actuator shaft couplings must compensate for both angular and parallel shaft misalignment due to the mounting bracket. Solid (rigid) shaft couplings are not acceptable in most applications, especially when formed or welded mounting brackets are used. Couplings should have little to no backlash, and are a safety relevant part of a linkage-less system.**

    **NOTE: Make absolutely certain that when the actuators are at or near 0 degrees (as indicated on the AZL display) that the valve / damper the actuator is coupled to is in the CLOSED (minimum flow) position. An exception to this is some back-flow type oil burners, where a wide open oil valve will result in minimal flow thru the oil nozzle.**

11. With the burner off, stroke each valve / damper through its intended range of motion using the SQM… actuator that is now coupled to the valve / damper. The menu path to do this is:

    *Params & Display > RatioControl > GasSettings* or *OilSettings > CurveParams*
    (For oil, also go into *Curve Settings*)

    In the Curve Parameters screen, all of the activated actuators for the selected fuel can be stroked through their intended range of motion. An arrow (>) indicates the actuator is driving to the set position and a colon (:) indicates that the actuator is at the set position. Verify that no binding will occur through the intended range of motion. Also note valves / dampers where wide open is less than 90 degrees.

12. Set special positions for all activated actuators. This will define where the actuators / VSD go for ignition, pre-purge, and post-purge. For dual fuel burners this will need to be done for both fuels. Special positions can be set using the following menu path:

    *Params & Display > RatioControl > GasSettings* or *OilSettings > SpecialPositions*

13. At this point, all other LMV5 parameters under the "BurnerControl" and "RatioControl" headings should be reviewed and set accordingly for the individual burner requirements.

    *Params & Display > BurnerControl*
    *Params & Display > RatioControl*

    Section 3 of this literature explains every parameter in detail, and the most commonly used parameters are shaded for easy reference.

14. If the burner has a Variable Speed Drive (VSD) on the blower, it must be standardized. In most cases, the VSD is a Variable Frequency Drive (VFD). See Section 5 in this literature if the VFD parameters are not already set, and for a more detailed standardization procedure. If the VFD parameters are set, standardize the VFD using the following menu path:

    *Params & Display > VSD Module > Configuration > Speed*

    Once ***Standardization*** is set to "activated", the air damper should open to its pre-purge position, and the blower should ramp up, pause, and then ramp back down. If this does not occur, make sure that the VSD is set to "air influenced" and the safety loop is closed.

**Transferring Parameter Sets Using the AZL Display**

This procedure will detail how to transfer a parameter set from one burner to another burner. In this example, the parameter set will originate from Burner #1 (B1) and will be copied to Burner #2 (B2). Naturally, using a similar procedure, the parameter set from Burner #1 can be copied to Burners #3, #4, #5, etc. The ACS450 PC software can also be used for this purpose (see Section 9).

**Note: Passwords are transferred with the parameter sets. Manual operation settings are not transferred with parameter sets.**

1. Obtain the OEM or service level passwords for B1 and B2.

2. On B1, upload all of the current parameters from the LMV5 to the AZL flash memory using the following menu path:

    *Updating > ParamBackup > LMV5x -> AZL*

    The OEM or service level password for B1 will be necessary to access this. This will upload all of the current LMV5 parameters to the AZL flash memory. This process is complete when the AZL states "Parameters have been stored". If the LMV5 on B2 is known to have a blank burner ID, then power off B1 LMV5, remove the AZL, and skip to step 5. Otherwise, go to the next step.

3. Write down B1 burner ID. This can be found at the following menu path:

    *Operation > Burner ID*

    After this step, B1 LMV5 can be powered off. After B1 is powered off, remove the AZL.

4. On B2, write down the burner ID if it is not blank. If the burner ID on B2 is not the same as B1, change the burner ID on B2 to match B1. Changing the burner ID can be done using the following menu path:

   *Updating > BurnerID*

   The OEM level password will be required to change the burner ID.

5. Power off B2 LMV5. After B2 LMV5 is powered off, remove the AZL from B2 and replace with the AZL from B1. Power B2 LMV5 back on.

6. Now that the burner IDs match or the B2 burner ID is blank, the B1 parameter set can be downloaded into B2 using the following menu path:

   *Updating > ParamBackup > AZL -> LMV5x*

   The OEM or service level password for B2 will be necessary to access this. This will download all of the parameters from B1 AZL into the LMV5 on B2. This process may take up to 5 minutes. This process is complete when the AZL states "Backup Restore finished Parameter BC : Complete" or “Backup Restore finished Parameter BC : Partial". Do not interrupt this process once it is started. Also, the alarm output will be energized when the new parameter set is downloaded to B2 LMV5.

7. After this is complete, B2 can be powered down. The AZL from B1 can be returned to B1 and the AZL from B2 can be reconnected to B2. Power B2 LMV5 back on.

8. If the burner ID on B2 was changed to allow the backup, then return the burner ID to what it was previously. If the burner ID was blank before the download, change the burner ID on B2 to a unique value different than B1. Typically, the burner serial number is used.

   **NOTE: An exact copy of all parameters is transferred when the above procedure is executed, including light-off positions, Fuel Air Ratio Control Curves and $O_2$ Curves. Typically, even "identical" burners and boilers need unique light-off positions, Fuel Air Ratio Control Curves and $O_2$ curves. Since this is typically the case, curves and ignition positions are typically deleted after the parameter set is downloaded into a new burner.**

**Suggested Initial Light-off for LMV5 Systems**

1. The following procedure assumes the following:

   a. Fuel train "Pilot GP2" was selected for a gas pilot burner.
   b. Pre-requisites for Basic LMV51 systems or LMV52 systems (from above) are met.
   c. Procedure for Configuring (Parameterization of) an LMV5 has been done (from above).
   d. This is a first-time commissioning of the LMV5 and the combustion control curve is blank (no points are entered).

2. Close manual main fuel (gas) valve that is downstream of the pilot take-off.

3. Ensure burner switch is off. If the LMV5 is not yet powered, turn on the power to the LMV5.

4. At this point, all safety interlocks that can be checked should be checked in a safe manner. This includes but is not limited to: low water cut offs, high temperature switches, high gas pressure switch, low gas pressure switch, proof of closure (POC), etc.

5. Later in the procedure when the burner is running, the rest of the safety interlocks must be checked in a safe manner. This includes but is not limited to: Air pressure switches, high steam pressure limits, draft switches, etc.

6. Set parameter ***ProgramStop*** to Interval 1, Phase 44. This will stop the burner from progressing past lighting the pilot. This parameter can be found under the following menu path:

   *Params & Display > RatioControl > ProgramStop*

7. Turn on the burner switch. The burner should drive to pre-purge (Phase 24), drive to ignition (Phase 38), light the pilot, and stop in pilot stabilization (Phase 44). If the pilot does not light on a new installation, there could be air in the gas line. Bleed the air in a safe manner if necessary and attempt to re-light the pilot.

8. Once the pilot is lit, tune the pilot by adjusting the ignition position of the air actuator and / or adjusting the pilot gas pressure regulator, if necessary. Pilot flame should be stable and return a flame signal of 85% or greater. Ignition positions can be adjusted at this time using the following menu path:

   *Params & Display > RatioControl > GasSettings > SpecialPositions > IgnitionPos*

9. Once a satisfactory pilot flame is established, set ***ProgramStop*** to Interval 2, Phase 52. The burner should open the main fuel (gas) valves and attempt to light the main flame. The LMV5 should show a flame failure since the manual main fuel (gas) valve is closed.

10. If a flame failure does occur, proceed to reset the LMV5 and open the manual main fuel (gas) valve. The burner should once again proceed through the startup sequence, light the pilot and then attempt to light the main flame.

11. If the main flame lights, adjust the ignition position of the gas valve to achieve a safe main flame. At this time, a calibrated stack gas analyzer should be inserted into the stack and used to evaluate combustion. If the main flame fails to light, the ignition position of the firing rate control valve and / or the gas pressure regulator may need to be adjusted to achieve a combustible mixture at the ignition position. After the combustion has been verified to be safe with an analyzer, ***ProgramStop*** can be left at Interval 2, Phase 52 for boil out or boiler warming if required.

**Suggested Ratio Control Curve Commissioning**

1. The procedure below assumes the following:

    a. Pre-requisites for Basic LMV51 systems or LMV52 systems (from above) are met.
    b. Procedure for Configuring (Parameterization of) an LMV5 has been done (from above).
    c. This is a first-time commissioning of the LMV5 and the combustion control curve is blank (no points entered).
    d. The burner has been lit off, and is at ignition position.
    e. A calibrated stack gas analyzer is sampling the stack gas and can read %$O_2$ and ppm CO.
    f. The boiler has been warmed up to operating temperature / pressure.

2. If activated, set parameter ***ProgramStop*** to deactivated. This will permit the ratio control curve to be commissioned. The ratio control curve can be found under the menu:

    *Params & Display > RatioControl > GasSettings > CurveParams*

3. Go to Point 1. Point 1 is automatically set to ignition position values. When Point 1 is entered, the AZL will prompt to "change" or "delete" the point. "Change" should be selected. Next, the AZL will prompt for "Followed" or "Not followed". "Followed" should be selected. All actuators and / or VSD that have been activated should show up on this screen. If more than one Aux actuator or VSD are activated, the screen may need to be scrolled down to show the other actuators. If an $O_2$ sensor is being used and is activated, the $O_2$ reading will also be displayed.

    **NOTE: Using the "Not followed" option is possible but not recommended for most situations since the results of changing the actuator positions in "Not followed" mode cannot be seen real time on a combustion analyzer. When "Followed" is selected, a carat (>) is shown when the actuators / VSD are moving to the displayed position. A colon (:) is shown when the indicated positions are reached. A pound (#) is shown when the Aux 3 FGR actuator is being held at position due to a time or temperature-based FGR hold.**

4. If the low fire point is not known (maximum burner turndown), adjust the Point 1 actuator positions until maximum safe burner turndown is achieved. Record the fuel flow. If the fuel flow is not available, burner head pressure can be used as a last resort.

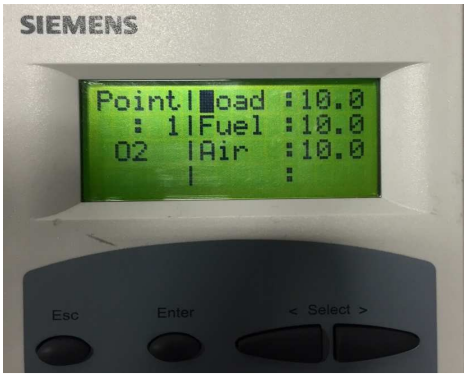


**Figure 4-5: Point 1 on the Ratio Control Curve**

**NOTE: While commissioning the Ratio Control Curves, it is the responsibility of the technician to ensure that safe fuel / air ratios are being maintained. If an AZL5 arrow key is held down when adjusting an actuator position, the position will be changed at a progressively faster rate**.

5. Set the load number to 100%. Increase the effective firing rate of the burner by increasing the actuator and / or VSD positions in a way that maintains a safe fuel / air ratio. This is typically accomplished by increasing air, fuel and VSD (if equipped) in a stepwise rotation. Keep increasing the firing rate in this manner until high fire positions of the actuators / VSD are reached.

   **NOTE: Typically, the gas pressure regulator immediately upstream of the firing rate control valve will need to be adjusted on a new installation. Adjust the regulator such that the firing rate control valve is between 60-80 degrees open at high fire.**

6. Once high fire actuator / VSD positions and gas pressure regulator(s) are set, record actuator / VSD positions, burner head pressure, high fire fuel flow, and gas pressure upstream of the firing rate control valve. After this is recorded, the burner can be shut down.

7. With the burner off, go back to Point 1. When Point 1 is entered, the AZL will prompt to "change" or "delete" the point. "Delete" should be selected, and Point 1 should be deleted.

8. Now that low fire and high fire fuel flows have been established and the gas pressure regulator has been set, the Ratio Control Curves can be laid out using fuel flow. If fuel flow is not available, burner head pressure can be used as a last resort. The curves can be laid out using paper and a calculator, or a free excel spreadsheet is available for this purpose. This spreadsheet, called the "LMVx Curves Spreadsheet", can be found at www.scccombustion.com.

   The next page shows how the "LMVx Curves Spreadsheet" used to set up a 600 BHP steam boiler with FGR (Aux 3 actuator) and a VSD. This is an example to illustrate what a typical setup might look like, and is not intended to be copied verbatim to an LMV5 in the field.

   **NOTE: Up to 15 curve points can be entered; however, 10 points are recommended for most applications.**

| | |
|---|---|
| | Indicates infromation to be filled out before commissioning burner |
| | Indicates infromation to be filled out during burner commissioning |

| | 600 BHP Boiler with FGR and VFD | Units | Input Data |
|---|---|---|---|
| Application Info | Burner Output at High Fire | MM BTU / HR | 25 |
| | Burner Head (manifold) pressure at High Fire | IN WC | 8 |
| | Burner Turndown | xx to 1 | 6 |
| | Heating Value of Gas | BTU / SCFH | 1000 |
| | Boiler Efficiency | % | 82 |
| | LMV Load Numbers : Base on Manual Entry or Auto Calc Gas flow? (M = Manual Entry, A = Automatic Calc) | A or M | A |

**Actuator / VSD Ratio Control Curves**

| | | Manual Input | These cells are calculated from the "Application Info" cells above | | | | | | | Manually Input during Ratio Control Curve Commissioning | | | | | |
|---|---|---|---|---|---|---|---|---|---|---|---|---|---|---|---|
| | LMV Curve Point | Gas flow to Burner (Manual Entry / Paste) | Gas flow to Burner (Auto Calc) | LMV Load at Curve Point | Burner Output | | Burner Head Pressure (Approx) | Boiler Output @ Efficiency | Steam Flow 230° F feed 100 PSIG | Air Act Pos | Fuel Act. Pos | VSD Speed | Aux 1 Act Pos | Aux 2 Act Pos | Aux 3 Act Pos |
| CURVE POINTS (Ratio Control) | # | SCFH | SCFH | % | MM BTU /HR | MW | IN WC | BHP | lb/hr | Deg | Deg | % | Deg | Deg | Deg |
| | 1 | | 4167 | 16.7 | 4.2 | 1.2 | 0.2 | 102.1 | 3448.7 | 5.0 | 3.0 | 55.0 | | | 5.0 |
| | 2 | | 6481 | 25.9 | 6.5 | 1.9 | 0.5 | 158.8 | 5364.7 | 12.0 | 6.0 | 60.0 | | | 10.0 |
| | 3 | | 8796 | 35.2 | 8.8 | 2.6 | 1.0 | 215.5 | 7280.7 | 22.0 | 12.0 | 65.0 | | | 15.0 |
| | 4 | | 11111 | 44.4 | 11.1 | 3.3 | 1.6 | 272.2 | 9196.6 | 30.0 | 18.0 | 70.0 | | | 20.0 |
| | 5 | | 13426 | 53.7 | 13.4 | 3.9 | 2.3 | 328.9 | 11112.6 | 42.0 | 28.0 | 75.0 | | | 25.0 |
| | 6 | | 15741 | 63.0 | 15.7 | 4.6 | 3.2 | 385.6 | 13028.6 | 55.0 | 39.0 | 80.0 | | | 30.0 |
| | 7 | | 18056 | 72.2 | 18.1 | 5.3 | 4.2 | 442.3 | 14944.5 | 63.0 | 48.0 | 85.0 | | | 33.0 |
| | 8 | | 20370 | 81.5 | 20.4 | 6.0 | 5.3 | 499.0 | 16860.5 | 68.0 | 56.0 | 90.0 | | | 30.0 |
| | 9 | | 22685 | 90.7 | 22.7 | 6.6 | 6.6 | 555.7 | 18776.5 | 75.0 | 64.0 | 95.0 | | | 30.0 |
| | 10 | | 25000 | 100.0 | 25.0 | 7.3 | 8.0 | 612.4 | 20692.4 | 82.0 | 71.0 | 100.0 | | | 26.0 |

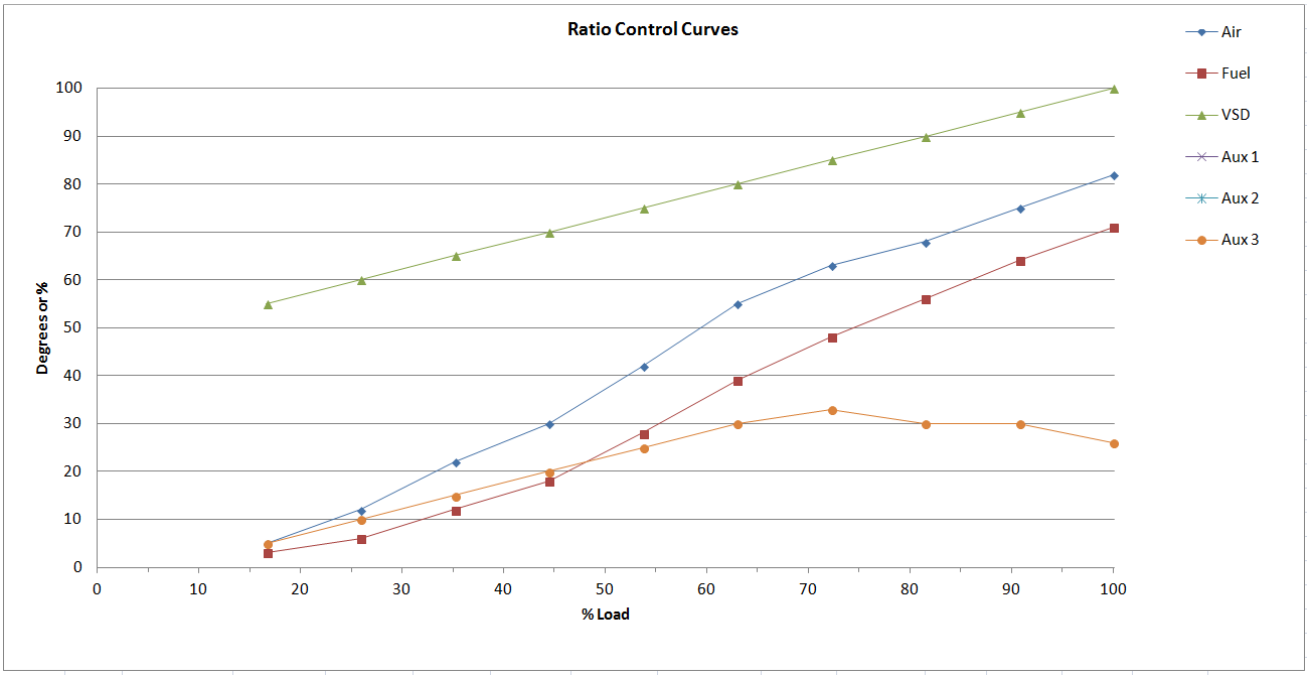


**Figure 4-6: LMV5x Curves Spreadsheet Used on a 600 BHP Boiler with FGR and a VSD**

**NOTE: When in a curve point on the right-hand side of the AZL screen, pressing "Esc" will bring the cursor back to the left, off of the numbers. Pressing "Esc" again while off of the numbers will bring up a prompt to ask if the point is to be stored (press "Enter") or the changes canceled (press "Esc"). If store is selected, a bar will rotate on the left-hand side of the AZL5 display while the point is being stored.**

**NOTE: When putting in a new point that is not yet defined (XXXX shown for the positions and load), pressing "Enter" will put in values for the positions and load from the previous point based on load number. These values serve as a place to start for the new point.**

9. With the Ratio Control Curves laid out on paper or with the spreadsheet, begin setting the curve points from low fire (Point 1) to high fire (Point 10). The general procedure for each point is to match the load number to the fuel flow while maintaining safe combustion. After this is complete, adjust the air and / or FGR as necessary to achieve safe, efficient combustion and emissions compliance on each point.

10. The following is a summary of what should be achieved for each point on the Ratio Control Curve:

    For standard burners (LMV51, or LMV52 without $O_2$ trim):

    a. Safe, efficient combustion as verified by a calibrated stack gas analyzer
    b. The % load matching the fuel flow within +/- 5%
    c. Emissions compliance
    d. Smooth Ratio Control Curves (no sharp peaks and valleys)

    For standard nozzle mixing burners (no or low % FGR) and $O_2$ trim (LMV52):

    e. All points **a** thru **d** above
    f. VSD speed should increase with load in a linear fashion (if equipped)
    g. The % load matching the fuel flow within +/- 3%
    h. Find and record the $\%O_2$ wet corresponding to the fuel rich limit (***O2 Alarm*** value) for each point by probing*
    i. Find and record the $\%O_2$ wet corresponding to the fuel lean limit (***O2 MaxValue***) for Point 1 and Point 10 by probing*
    j. Last but not least, leave the curve points so that the $\%O_2$ wet is 2% higher than the fuel rich limit (***O2 Alarm*** value). Record this as the saved value for each curve point.

    For pre-mix mesh burners and nozzle mixing burners (high % FGR) and $O_2$ trim (LMV52):

    k. All points **a** thru **d** above
    l. VSD speed should increase with load in a linear fashion (if equipped)
    m. The % load matching the fuel flow within +/- 3%
    n. Determine the $\%O_2$ wet corresponding to the fuel rich limit (***O2 Alarm*** Value) for each point. Probing may or may not be possible depending on the burner design. Also, follow burner OEM recommendations. Most mesh burner elements can be damaged if run too fuel rich.*

o. Find and record the $\%O_2$ wet corresponding to the fuel lean limit (***O2 MaxValue***) for Point 1 and Point 10 by probing or according to burner OEM recommendations.*

p. Find the target $\%O_2$. For these burners, the target $\%O_2$ for each point will be the $\%O_2$ wet corresponding to emissions compliance (typically CO, NOx). After the target $\%O_2$ is found, increase the $\%O_2$ and leave the point at least 0.5% $O_2$ leaner than the target $\%O_2$. Record this as the saved value for each curve point.

*** NOTE: This information will be needed to commission the $O_2$ trim, and it is convenient to obtain this information when commissioning the Ratio Control Curve. When probing the fuel rich limit, it is not recommended to exceed 200 ppm CO (dry basis) or less than 1.0% $O_2$ (wet or dry basis) for any point. When probing the fuel lean limit, it is not recommended to exceed 200 ppm CO or adversely affect flame stability for any point. The LMV52 with the QGO20 $O_2$ sensor reads $\%O_2$ on a wet basis, while most external exhaust gas analyzers read $\%O_2$ on a dry basis.**

11. After Point 10 values have been saved, press “Esc” to exit *CurveParams.*

**Suggested Load Control Setup**

After the Ratio Control Curve has been commissioned, the load controller should be set up. The load controller can be run in internal load control modes (uses PID inside LMV5) or external load control modes (uses a remote PID control separate from the LMV5). The table below outlines the different load control modes available. Most LMV5s operate with the internal load controller.

| Label | Description | LMV5 Setpoint | Upon X62.1 - X62.2 Closure |
|---|---|---|---|
| ExtLC X5-03 | External load control, firing rate from 3-position input | N/A (firing rate via 3-position input or staged input) | Change to "IntLC", setpoint W1 |
| | External load control, staged oil | | |
| IntLC | Internal load control, setpoint set locally on LMV5 | W1 / W2 | Remain in "IntLC", change to setpoint W2 |
| IntLC Bus | Internal load control, setpoint from Modbus command | W3 (Modbus) | Change to "IntLC", setpoint W1 |
| IntLC X62 | Internal load control, setpoint from analog signal on terminal X62 | Remote setpoint | |
| ExtLC X62 | External load control, firing rate from analog signal on terminal X62 | N/A (firing rate via X62) | |
| ExtLC Bus | External load control, firing rate from Modbus command | N/A (firing rate via Modbus) | |

Note: Bump-less transfer (LMV5 will not cycle off) will occur from "IntLC" to any external load control mode. Bump-less transfer will also occur from any external load control mode to "IntLC" provided that the pressure or temperature is not above the cycle-off limit (***SD_ModOff***).

**Figure 4-7: LMV51.1 and LMV52 Load Controller Modes**

Most boilers use load controller mode "IntLC" which utilizes the local temperature / pressure sensor and a local setpoint entered through the AZL display. The following procedure outlines how to set up this mode:

1. If possible, shut off the burner switch. Let the burner get back to Phase 12 (standby).

2. Verify that the load controller is in the correct mode through the following menu path:

   *Params & Display > LoadController > Configuration*

   Set parameter ***LC_OptgMode*** to "IntLC". Next, verify that the connected pressure or temperature sensor is configured correctly. In the same menu, set ***Sensor Select*** to "PressSensor" for a steam boiler or to the appropriate temperature sensor for a hot water boiler.

3. If a pressure sensor was selected, two additional parameters must be set in the same menu. Set parameter ***Ext Inp X61 U/I*** to match the pressure sensor wired into the X61 terminal. Typically this will be 0-10VDC or 4-20mA and will be printed on the side of the sensor. Next, set parameter ***MRange PressSens*** to the high range of the pressure sensor. This is typically printed on the side of the pressure sensor.

4. Configure setpoint W1 (the local setpoint) through the following menu path:

   *Operation > BoilerSetpoint*

5. Set the turn-on point (***SD_ModOn***) and the turn-off point (***SD_ModOff***) for the boiler. These are percentages based on the current setpoint (W1). The menu path for these parameters is:

   *Params & Display > LoadController > ControllerParam*

   Typically, the burner is shut off 10% over setpoint and turned back on 1% above setpoint.

   **NOTE: Other pressure / temperature controls or limits on the boiler must be set above the *SD_ModOff* pressure / temperature.**

   **NOTE: *SD_ModOff* and *SD_ModOn* are only valid for internal load controller modes. If the LMV5 is in an external load controller mode, *SD_ModOff* and *SD_ModOn* are ignored.**

6. If it is safe to do so, turn on the burner switch. If thermal shock is a concern, allow the boiler to warm. The burner can be put in manual and held at low fire if necessary through the *Manual Operation* menu.

7. Once the boiler is up to pressure / temperature, is modulating, and is carrying normal load, adjust the PID values through the following menu path:

   *Params & Display > LoadController > ControllerParam > ContrlParamList*

Properly adjusted PID values will result in the pressure / temperature staying within +/- 3% of setpoint without constantly changing the load and modulating the actuators.

***P-Part*** (Proportional Band) - Increases firing rate based on how far below setpoint the temperature / pressure is. Smaller values cause a more aggressive P response to a drop in pressure / temperature relative to setpoint. Values that are too small will cause hunting. Typical setting: 10% to 30%.

***I-Part*** (Integral) - Serves to eliminate steady state "droop" caused by the proportional band setting. Thus, this works hand in hand with ***P-Part*** to bring the pressure / temperature up to setpoint. Smaller values cause a more aggressive I response (a setting of 1 is most aggressive). Values that are too small will cause overshoot. Typical setting: 80 sec to 300 sec. A setting of 0 deactivates the feature, but this is not recommended.

***D-Part*** (Derivative) - Serves to eliminate overshoot, and allows a more aggressive integral setting. Larger values cause a more aggressive D response. ***D-Part*** is not needed on many steam boilers. If needed, small values of less than 20 typically work well. A setting of 0 deactivates the feature. Large values will typically cause hunting.

8. After the PID loop has been adjusted, it is possible that the load will still move up and down by a small amount (1-2% load). If this is the case, adjusting parameter ***MinActuatorStep*** may help eliminate this "micro-hunting". This parameter can be found in the following menu:

   *Params & Display > LoadController > ControllerParam*

   ***MinActuatorStep*** is basically a dead band for the output of the PID loop. Typical setting: 1% to 4%. Values above 5% could cause hunting issues in some applications.

**Suggested Cold Start (Thermal Shock Protection) Setup**

The LMV51.1 and LMV52 have an internal load control and therefore have the ability to perform thermal shock protection. Thermal shock protection only functions when the LMV5 is in an internal load controller mode, namely IntLC, IntLC X62, or IntLC Bus (see chart on previous pages).

The cold start feature requires that the temperature or pressure of the boiler is measured by a sensor connected to the LMV5.

For a hot water boiler (temperature-based modulation), the same temperature sensor that is used for modulation must be used for the cold start feature. For a steam boiler (pressure-based modulation), a temperature sensor is also highly recommended for cold start. Temperature sensors are highly recommended since pressure does not always represent temperature in a non-firing steam boiler, especially when multiple steam boilers are piped to the same steam header. The paragraphs below will only mention temperature-based cold start, but the same ideas also apply to pressure-based cold start.

1. If possible, shut off the burner switch. Let the burner get back to Phase 12 (standby).

2. Access the cold start parameters through the following menu path:

   *Params & Display > LoadController > ColdStart*

   Set parameter ***ThresholdOn*** to the minimum permissible temperature where the burner can be released to modulate. Below this temperature, cold start will engage on initial startup (not during normal operation). Set ***ThresholdOff*** to a temperature higher than ***ThresholdOn***. If already engaged, cold start will disengage at the ***ThresholdOff*** temperature. Setting ***ThresholdOn*** and ***ThresholdOff*** is required for cold start.

   **NOTE: Parameters *ThresholdOn* and *ThresholdOff* are percentages based on the current setpoint (W1). If an additional temperature sensor is used on a steam boiler, *ThresholdOn* and *ThresholdOff* will be based on parameter *Setp AddSensor.***

3. For a steam boiler that is on a common header with other steam boilers, an additional temperature sensor is required for cold start. This will typically be a Pt1000 or Ni1000 RTD wired to terminal X60. Pt100 is possible but not recommended. Choose the appropriate sensor via parameter ***AdditionalSens***.

4. There are four basic ways that the cold start can be set. These are:

   **a. Basic Low Fire Hold**
   The LMV5 will be held at low fire until the ***ThresholdOff*** temperature is reached, and then the LMV5 will be released to modulate. This "hold" will re-engage at startup if the temperature falls below the ***ThresholdOn*** value. Parameter ***StageLoad*** must be set to 0.

   **b. Temperature-based Stepping Start**
   The LMV5 will be held at low fire until a certain temperature change is detected, and then a step up in burner output (load) will be taken. This continues until the ***ThresholdOff*** temperature is reached. This will achieve the ***ThresholdOff*** temperature faster than a basic low fire hold. Parameter ***StageLoad*** must be set to a value greater than 0, since the step-up in load is determined by this parameter. Parameter ***StageSetp_Mod*** must also be set to determine the amount of temperature change that will trigger a step-up in load. Parameter ***MaxTmeMod*** should be set to a high number (30 min) so that it has no effect.

   **c. Time-based Stepping Start**
   The LMV5 will be held at low fire until a certain time elapses, and then a step-up in load will be taken. This continues until the ***ThresholdOff*** value is reached. ***StageLoad*** must be set to a value greater than 0, since the step-up in load is determined by this parameter. Parameter ***StageSetp_Mod*** should be set to a high number (80%) so that it has no effect. Parameter ***MaxTmeMod*** is set to determine how much time should elapse before the next load step is triggered.

**d. Temperature / Time-based Stepping Start Combination**

This method combines methods **b** and **c** and if set correctly, is the fastest way to safely warm the boiler. The settings are similar to method **b**, but now parameter ***MaxTmeMod*** is set to have an effect (10 minutes for example). When this is done, the maximum time that a step-up in load will take is 10 minutes, regardless of the temperature change. If the temperature change defined by ***StageSetp_Mod*** happens before the 10 minutes elapses, then the temperature change will trigger the step-up in load.

When this mode is used, time usually triggers the load steps at the start of boiler warming and temperature change usually triggers the load steps closer to the ***ThresholdOff*** temperature. This is due to the more rapid rise in boiler temperature at higher firing rates.

5. After parameters are set for one of the methods above, set parameter ***ColdStartOn*** to activated. The next time the burner is started and the water temperature is below the ***ThresholdOn*** temperature, cold start should engage.

Below are typical settings for each of the four ways cold start can be set up.

| **Example: Steam Boiler with an Additional Temperature Sensor** | | | | |
|---|---|---|---|---|
| ***Parameter*** | **Low Fire Hold** | **Temp-based** | **Time-based** | **Temp/time-based** |
| ***ColdStartOn*** | Activated | | | |
| ***ThresholdOn*** | 50% (= 150°F) | | | |
| ***StageLoad*** | 0% | 5% | 5% | 5% |
| ***StageSetp_Mod*** | N/A | 5% | 100% | 10% |
| ***StageSetp_Stage*** | Staged Operation Only | | | |
| ***MaxTmeMod*** | N/A | 63 min | 5 min | 10 min |
| ***MaxTmeStage*** | Staged Operation Only | | | |
| ***ThresholdOff*** | 80% (= 240°F) | | | |
| ***AdditionalSens*** | Pt1000 | | | |
| ***Temp. ColdStart*** | Read Only | | | |
| ***Setp AddSensor*** | 300°F | | | |
| ***Release Stages*** | Staged Operation Only | | | |

**Figure 4-8: Typical Cold Start Parameter Settings**

The following page shows an example of a time-based stepping start.

| Parameter | % | Value | Notes |
|---|---|---|---|
| ***BoilerSetpoint*** or ***Setp AddSensor*** | N/A | 300°F | Current setpoint |
| ***ThresholdOn*** (% of current setpoint) | 50 | 150°F | Measured temperature must be below ***ThresholdOn*** at startup to engage cold start |
| ***ThresholdOff*** (% of current setpoint) | 80 | 240°F | Cold start will not disengage until ***ThresholdOff*** is met |
| ***StageSetp_Mod*** (% of current setpoint) | 80 | 240°F | Defines the necessary temperature change required to trigger a load step |
| ***StageLoad*** | 5 | N/A | Determines the size of the load step |
| ***MaxTmeMod*** | N/A | 10 min | Determines the max. time between load steps |

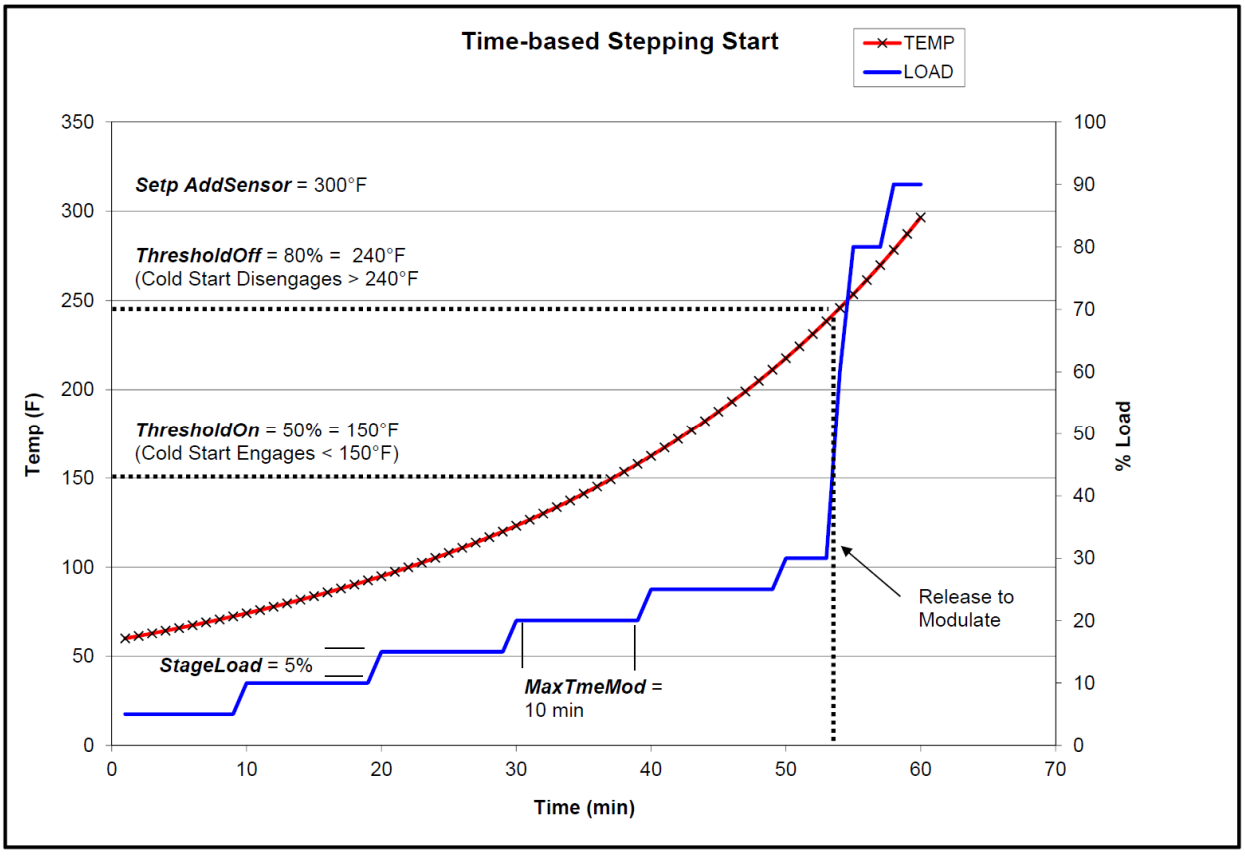


**Figure 4-9: Example of a Time-based Stepping Start**

**Additional Tips for Commissioning**

- If an LMV52 is being commissioned, activate the $O_2$ sensor as soon as possible. Once the $O_2$ sensor is heated, this will show a fast responding $O_2$ value on the AZL screen during Ratio Control Curve commissioning. This sensor reads $\%O_2$ wet so the value will be somewhat lower than an external flue gas analyzer.

- Using a fuel flow meter (temporary or permanent) for commissioning is always a good idea even for LMV51's without $O_2$ trim. If the fuel input (heat output) increases linearly with firing rate, the PID loop in any load control will work much better. A temporary, insertion type of flow meter is available from SCC Inc. for this purpose.

- If burner head pressure must be used as a last resort to estimate firing rate, bear in mind that head pressure does not increase with gas flow in a linear manner. There is a square root relationship between the differential pressure across the burner head and the gas flow. This relationship is very similar to how the pressure varies across a fixed orifice with an increase or decrease in flow. Also, furnace pressure must be accounted for by hooking up both sides of the manometer, one side to the burner head pressure and one side to the furnace pressure.

- Carbon Monoxide (CO) is produced when combustion is incomplete, typically due to the flame being too rich or too lean. CO is potentially explosive when mixed with air in the right proportions. For CO to be explosive in air, it must reach a concentration of at least 12.5% (125,000 ppm) with an ignition source present.

- If a burner is commissioned properly, actuator curves should increase smoothly with increasing load (firing rate). One exception to this would be the FGR actuator (Aux1 or Aux3) which commonly decreases (closes) as firing rate increases. Curves should always be smooth, with no sharp corners.

- The best and fastest method to commission a burner with an LMV5 is to set up a small table where the technician can have his laptop, AZL, fuel flow meter and external flue gas analyzer all within arm's reach. This allows the curve points to be input rapidly and accurately. If the information is entered in the laptop point by point, a very nice start-up report will also be generated.

- The ACS450 software is not as fast as using the AZL to commission the LMV5. Since this is the case, the ACS450 is typically not used to commission the LMV5. However, the ACS450 is very valuable when used to download an .mdb file (all parameter settings, fault and lockout history, in English) and also when used to download .par files (the machine-language parameter set from the LMV5). It is recommended to download both of these files after commissioning, so that there is a backup record of all parameter and curve settings.

- To go back out of the menu and check burner operation, press the < and > buttons at the same time. This will take the cursor to Normal Operation, so the normal operation screen can be viewed by pressing Enter. This can be done anywhere in the menu as long as a single parameter is not currently displayed. Pressing Esc will take the cursor back in to where it was in the menu.

- When in the *Normal Operation* screen, “Enter” can be pressed once to go to a "hidden" screen that shows all actuator / VSD positions in real time. Real time load and $\%O_2$ are also displayed.

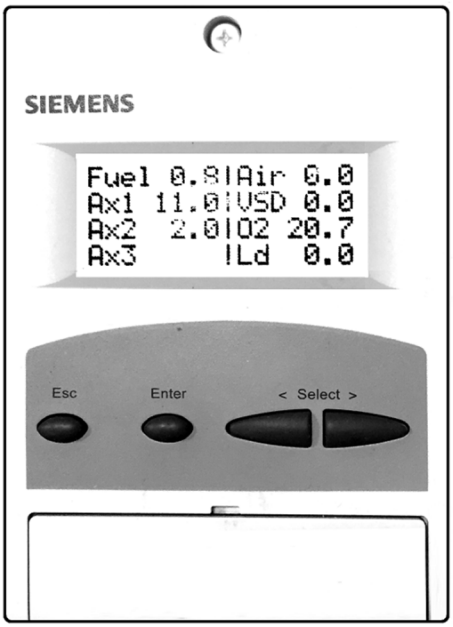


- Pressing the “Esc” and “Enter” buttons on the AZL at the same time will cause the LMV5 to immediately close the fuel valves and lockout.

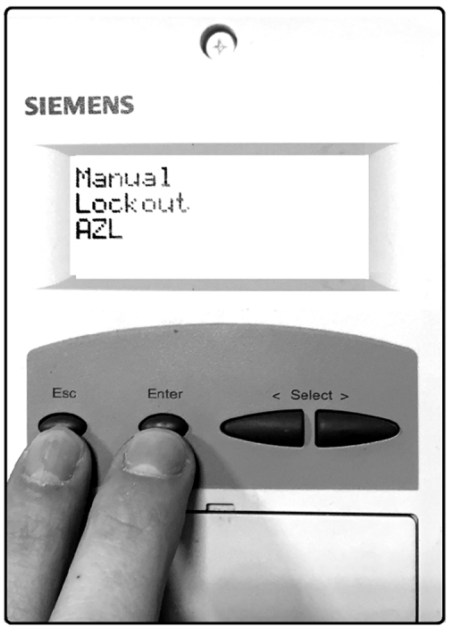


- When in the *Normal Operation* screen, the AZL contrast can be adjusted by pressing the “Enter” key with either the left (less) or right (more) arrow key.

**Special Features and Settings**

The LMV5 has special features and settings that are very useful in some situations. Some of these features are detailed below.

***Alarm act/deact*** An internal alarm silence. Alarm silence will reset when the LMV5 alarm is reset.

***MinTmeStartRel*** Permits the LMV5 to hold in phase 21 for a specified period of time with the start signal terminal energized. This can be used as a delay to let stack and/or fresh air dampers open.

***PressReacTme*** Allows the LMV5 to disregard the high and low gas / oil pressure switches for a settable time period after the main gas / oil valves open. This is used with automatic reset pressure switches so that pressure spikes due to the main valves opening will be ignored. This also allows for a reduced delta between switch setpoints and normal operating pressures. This time can also be reduced to 0.2 seconds, deactivating the feature. Not used with manual reset switches.

***NormDirectStart*** Permits the LMV5 to go from post-purge directly into pre-purge without turning the blower off. The blower air pressure switch must be checked by using a 3-way solenoid valve. The solenoid valve is configured under parameter ***StartSignal***.

***ForcedIntermit*** Shuts the burner down once every 24 hours to cycle and check flame scanner, air pressure switch, POC, and other safety devices.

***DriveLowFire*** Starts driving to low fire (***StartPointOp***) immediately after main fuel valves open. Enables less air to be put on the pilot for ignition, and enables a fuel rich light off without creating excessive CO. Also called "Golden Start" functionality.

***StartReleaseGas*** Configures terminal X7-03.2 as a start release for gas, CPI gas, CPI oil, or CPI gas + oil. Gas and oil POCs can be wired here, freeing up terminal X9-03.2 for gas valve proving. CPI stands for Closed Position Indication, which is essentially the same as Proof of Closure (POC).

***Config_PS-VP/CPI*** Configures terminal X9-03.2 for PS-VP (Pressure Switch - Valve Proving), CPI gas, CPI oil, or CPI gas + oil. CPI stands for Closed Position Indication, which is essentially the same as Proof of Closure (POC).

***Config X5-03*** Terminal X5-03.3 can be configured to hold the LMV5 in phase 36 (ignition position). Terminal X5-03.2 can be configured to disable $O_2$ trim.

***HeavyOilDirStart*** Terminal X6-01.3 can be used as an input for an external flame relay.

***ReacTmeLossFlame*** Adjustable flame failure response time (FFRT).

***SensOperPhGas*** Enables two flame detectors to be used on one burner (LMV52 only).

***ValveProvingType*** Enables gas valve proving on start-up or shutdown or both. This type of testing ensures that the gas valves are closed, and that the valve seats are in good condition.

***StartPointOp*** Can adjust which curve point the LMV5 will drive to after light off. This setting does not affect turndown.

***NumFuelActuators*** Permits the LMV5 to run dual fuel with a single actuator - two fuel valves on one actuator.

***ProgramStop*** Stops the LMV5 at a particular phase in the start-up or shutdown sequence. This is particularly useful when set to Phase 44 for tuning the pilot.

***FGR-Mode*** On an LMV52, this setting enables only the Aux 3 actuator to be held from modulating until a certain temperature or time after light off is met. This is usually used to delay the use of FGR until a certain time or until a stack temperature is met.

***ReleasecontctVSD*** If a VSD is being used, this enables the blower to coast down after post-purge is complete.

***O2SensServTim*** This sets a service interval for the $O_2$ sensor.

Intentionally Left Blank

| | |
|---|---|
| Section 1 | Overview |
| Section 2 | Wiring |
| Section 3 | Parameters |
| Section 4 | Commissioning |
| **Section 5** | **VSD** |
| Section 6 | $O_2$ Trim |
| Section 7 | Troubleshooting |
| Section 8 | Modbus |
| Section 9 | ACS450 |
| Section 10 | Revision History |
| Appendix A | Application Guide |
| Appendix B* | Complimentary Products Guide |


*Can be found at www.scccombustion.com.

HOME

| | |
|---|---|
| Section 1 | Overview |
| Section 2 | Wiring |
| Section 3 | Parameters |
| Section 4 | Commissioning |
| **Section 5** | **VSD** |
| Section 6 | $O_2$ Trim |
| Section 7 | Troubleshooting |
| Section 8 | Modbus |
| Section 9 | ACS450 |
| Section 10 | Revision History |
| Appendix A | Application Guide |
| Appendix B* | Complimentary Products Guide |


*Can be found at www.scccombustion.com.

HOME

# Section 5 - Variable Speed Drive Control

**Table of Contents**

Introduction ..... 2
VFD and AC Induction Motor Fundamentals ..... 2
Line Reactors ..... 3
Output Wiring / Load Reactors ..... 4
Shaft Current ..... 5
Braking Resistors ..... 5
Types of VFDs: Vector and Volt/Hz ..... 7
Centrifugal Blower Fundamentals ..... 7
Configuring VFDs for use with the LMV52 ..... 8
Standardizing the LMV52 ..... 9
Blower Speed Monitoring ..... 13
Suggested Setup Procedure for the VFD Control ..... 15
Additional Tips for Burners with VFD Control ..... 16

## Introduction

The LMV52 features an integrated, closed-loop Variable Speed Drive (VSD) control that is typically used to ramp the speed of the combustion air blower with firing rate. This is accomplished by transmitting a 4-20 mA signal from the LMV52 to the VSD, and then reading the speed of the motor via a motor-mounted, safety-rated encoder wheel (speed wheel) and speed sensor. By using the speed wheel and sensor, the LMV52 can positively verify both the speed and direction of the blower, thus ensuring proper VSD operation.

Blower speed and direction of rotation have a large impact on the airflow delivered to the burner, and thus the fuel-air ratio. The most common type of VSD, a Variable Frequency Drive (VFD), is typically not safety-rated and will typically not fail in a safe manner (a VFD failure will typically cause the combustion air blower to slow down or stop, causing the burner to go rich). The combustion air pressure switch offers only a small amount of protection in a VFD application, since the switch must be set to allow low fire operation when the blower is spinning slowly and the blower output pressure is low. The motor or blower shaft-mounted, safety-rated speed wheel and sensor ensure that a VFD failure will be quickly detected and the burner will shut down in a safe way.

## VFD and AC Induction Motor Fundamentals

VFDs are typically connected to a three-phase alternating current (AC) induction motor that is used to power the combustion air blower. Modern VFDs operate by taking single- or three-phase AC and rectifying this power to high voltage direct current (DC) for the DC bus. The AC power is typically rectified to DC with banks of diodes. The DC bus feeds a bank of Insulated Gate Bipolar Transistors (IGBTs), and a microprocessor is used to fire the IGBTs in a way that the voltage and frequency of the modified sine waves can be controlled. This is done for each of the three phases on the VFD output. The microprocessor varies the voltage and frequency of the modified sine waves in response to a signal; in this case, the 4-20mA input.

By design, a three-phase AC induction motor will attempt to approximately synchronize its speed with the frequency of three-phase power that it is being fed. Thus, if the frequency can be adjusted, so can the speed of the motor. As their name suggests, three-phase induction motors generate magnetic fields in the rotor of the motor by using induction rather than by using slip rings or brushes. The advantage of this type of construction is very low maintenance, and a small disadvantage is a phenomenon called slip. Slip is defined as the difference between the theoretical speed at a given AC frequency and the actual speed at a given AC frequency. Slip increases as the load on the motor (torque output) increases.

Three-phase AC motors that do not have slip are referred to as synchronous motors, since these motors exactly synchronize their speed to the frequency of the incoming AC power. This type of motor is not typically used on blowers, but is mentioned as a comparison to the AC induction motor. A truly synchronous 2-pole motor will spin at exactly 3600 RPM if it is fed exactly 60 Hz. A truly synchronous 4-pole motor will spin at exactly 1800 RPM if it is fed exactly 60 Hz. In contrast, a 2-pole, three-phase AC induction motor fed 60 Hz will spin less than 3600 RPM, and how much less is determined by how heavily the motor is loaded and how much slip that loading causes.

As mentioned above, VFDs switch multiple IGBTs on and off very rapidly to generate a "modified" sine wave on all three phases going to the motor. Doing this has some tradeoffs, one of which is electrical noise, or harmonics. This noise is typically "wire borne" instead of airborne, and can cause issues with electronics in some situations. Thankfully, electrical noise associated with VFDs can be mitigated using proper wiring techniques (connecting shields and grounds correctly) and by the proper application of line reactors and / or load reactors for some applications. For difficult applications, EMC filters for the VFD are also available.

**Line Reactors**

Line reactors, or "chokes", are typically used when the impedance on the input side of the drive is low. Impedance on the input side of the drive is typically low when a relatively small VFD is being fed by a relatively large transformer. In this situation, the supply side of the drive is "stiff", meaning that an instantaneous current draw by the drive will be met very quickly by the large transformer (think square wave form), causing voltage and current distortions in the power distribution system feeding the drive. In this situation, adding a line reactor will add reactance which opposes instantaneous current draw and "softens" the input side of the drive.

Conversely, if the transformer feeding the drive is not large relative to the drive, the impedance on the input side of the drive is higher and the system is "softer". In this situation, an instantaneous current draw by the drive will not be met as quickly, and the resulting voltage and current distortions in the power distribution system feeding the drive will be smaller. An additional line reactor in this situation is not needed.

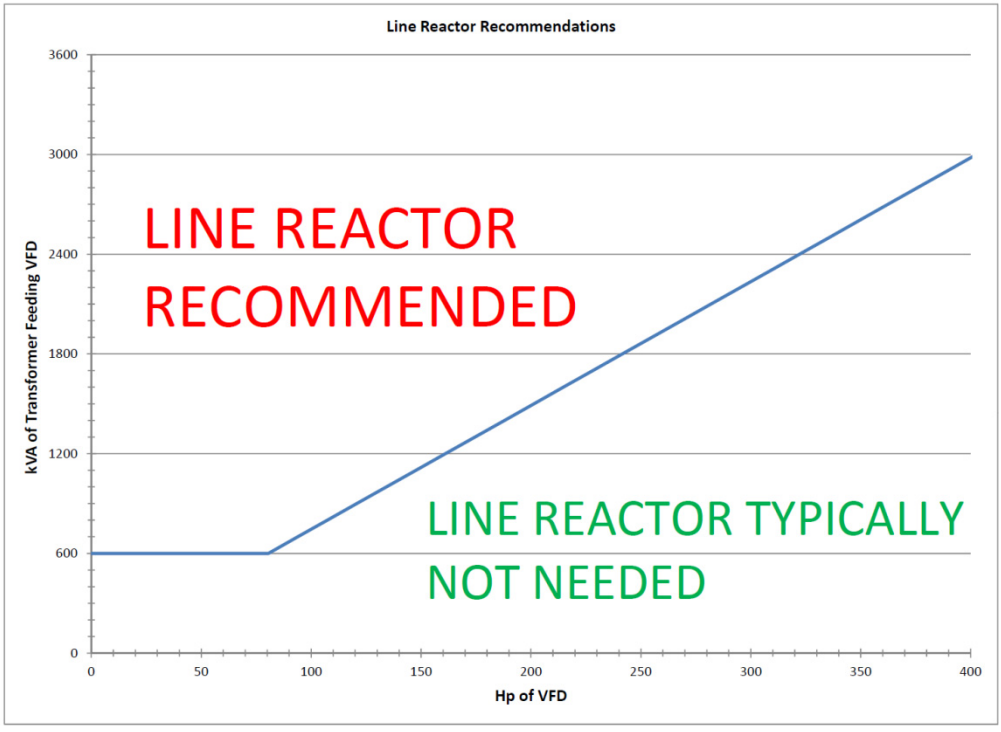


**Figure 5-1: Line Reactor Recommendation - VFD (HP) vs Transformer (kVA)**

In general, a line reactor is recommended if the supply capacity (kVA) of the transformer feeding the drive is greater than or equal to 10 times the capacity (kVA) of the drive for transformers 600 kVA and larger.

Figure 5-1 notes:

1. Drive power is shown in HP rather than kVA. This conversion can be done assuming a power factor of unity (1) and negligible losses due to efficiency.
2. Transformers less than 600 kVA have high enough impedance ("soft" enough) so that line reactors are typically not necessary.

**Example 1**: A 25 HP drive is being fed by an 800 kVA transformer. Is a line reactor required?

Assumptions:
The power factor is unity (power factor =1)
Losses due to efficiency and wiring are negligible

1. Convert horsepower to kilowatts: 25 HP x 0.745 HP/kW = 18.63 kW
2. Convert kilowatts to kVA: kW = kVA * Pf (Pf is power factor, which is assumed to be 1 in this example)
   Thus, a 25 HP drive is 18.63 kVA.

3. Calculate the kVA ratio: 800 kVA / 18.63 kVA = 42.94
   Since a ratio of 42.94 is greater than 10, and the transformer is larger than 600 kVA, a line reactor will be necessary for this application. The same conclusion can also be arrived at by using Figure 5-1.

**Example 2**: A 10 HP drive is fed by a 400 kVA transformer. Is a line reactor required?

Using the same assumptions and calculation as example 1, the kVA ratio is 53.7, but the transformer is smaller than 600 kVA, so a line reactor is not necessary. The same conclusion can also be arrived at by using Figure 5-1.

**Output Wiring / Load Reactors**

When the VFD / motor are running, high levels of electrical noise are produced on the wiring between the VFD and the motor. This is due to the fact that modified sine waves produced by the drive IGBTs are basically high frequency / high voltage DC pulses. These output wires must be enclosed in some type of shielding (metallic conduit or metal-shielded cable) to mitigate radiated electrical noise.

Wire length between the VFD and the motor should be kept to less than 150 feet if possible due to the reflected wave / standing wave phenomenon and voltage overshoot phenomenon. Both of these phenomena are rather complex, and are a function of the wire length from the VFD to the motor. The reflected wave / standing wave phenomenon and voltage overshoot phenomenon can damage non-inverter duty motor windings over time due to the high peak voltages that these phenomena can produce.

**NOTE: The DC bus runs at voltages substantially higher than the incoming voltage to the drive (about 35% higher) and typically employs large capacitors. These capacitors remain charged for a period of time after the incoming power to the drive is de-energized, and are a shock hazard until they discharge. See the VFD manufacturer's recommendations for minimum waiting time to work on the drive after the drive is de-energized.**

If wire length cannot be kept to less than 150 feet on the drive output, correction options are available. These are listed in Figure 5-2:

| Wire Length - up to (ft) | Correction Option |
|---|---|
| 150 | None Required |
| 300 | Load Reactor at VFD Output |
| 650 | Load Reactor at Motor Input |
| 2000 | dV/dT Filter on VFD Output |
| Consult Motor OEM | Inverter Duty Motor |

**Figure 5-2: Correction Options for Long Wire Length between VFD and Motor**

**Shaft Current**

As was mentioned earlier, the fast switching or "firing" of the IGBTs enable the VFD to produce modified sine waves of different frequencies and different voltages in order to speed up or slow down a motor. The fast switching of the IGBTs does have electrical side effects, some of which are detailed on the previous pages.

This fast switching of the IGBTs can also cause "shaft current" on the motor. When this happens, a voltage charge builds up on the motor's shaft. When this voltage gets high enough, it will arc to ground through the path of least resistance. The path of least resistance is typically the ball bearings that support the rotor of the motor. When this arcing occurs in the bearings, damage occurs to the bearings. Over time, the bearings will be destroyed, and the motor will fail.

Shaft current can be mitigated by using a grounding ring, which is typically bolted to the motor housing and has some type of conductive filament that contacts the shaft, thus grounding the shaft. Some motor OEMs have grounding rings built into the motor, so an external ring is not necessary.

**Braking Resistors**

Three-phase AC induction motors can also function as three-phase AC generators if they become driven by what they typically drive. In the case of a blower, the motor drives the blower wheel when the speed of the wheel is increased (accelerated). Conversely, the blower wheel can drive the motor when the speed of the blower wheel is decreased (decelerated) with a closed air damper. When the motor is driven by the blower wheel, it will act as a generator and "push" electrical energy back to the VFD. This energy will be seen as a voltage increase on the VFD's DC bus.

The DC bus can absorb a small amount of energy in the DC bus capacitors. However, if the motor generates more than what these capacitors can absorb, the DC bus voltage will rise to critical levels and one of two actions will be taken by the VFD. Depending on the parameter setting of the VFD, the VFD will either stop decelerating (stall prevention) or the VFD will alarm and shut down. Either one of the actions is not a desirable result on a combustion air application.

To avoid DC bus overvoltage issues, a braking resistor can be added to the VFD so that the excess electrical energy generated by decelerating the blower wheel can be turned to heat. This process happens seamlessly so that the VFD can decelerate the blower smoothly.

Due to a number of variables, it is difficult to determine if a braking resistor will be needed on a particular application unless that application has been tested. The only disadvantage of having a braking resistor and not needing it is cost and possibly the space for the resistor. Burners having the following characteristics will typically need a braking resistor:

1. A heavy blower wheel - Kinetic energy is stored in a spinning wheel. The heavier the blower wheel, the greater the stored energy. When this wheel is slowed down, the kinetic energy must go somewhere, and it is usually "pushed" back to the VFD as electrical energy.

2. Fast ramp times - The faster the ramp times, the faster the blower wheel must be accelerated and decelerated. Just like a car, more energy is required to accelerate quickly (bigger engine) and more energy is required to be dissipated when decelerating quickly (bigger brakes). Decelerating a given blower wheel more quickly will push more electrical energy back to the VFD.

3. Mostly closed air damper - A motor spinning at 3600 RPM draws fewer amps with a closed or nearly closed air damper as compared to a wide open air damper. Thus, the horsepower used by the motor and the drag (braking) on the blower wheel will be much less with a closed or nearly closed air damper. Decelerating a given blower wheel with reduced drag will also push more electrical energy back to the VFD.

As one might expect, the above points compound one another. Decelerating a heavy blower wheel with a fast ramp time and a mostly closed air damper will push a large amount of electrical energy back at the VFD and will likely cause DC bus overvoltage issues if a braking resistor is not installed.

In contrast, a light blower wheel (sheet metal instead of cast iron), a slower ramp time (90 seconds instead of 30 seconds), and slowing the blower down on a more open air damper are characteristics that will greatly reduce the amount of electrical energy pushed back to the VFD and should allow the braking resistor to be omitted in most cases.

On some models of VFDs, braking resistors can be added after the VFD is installed if necessary. This is a point to consider when installing VFDs for combustion air applications.

**Types of VFDs: Vector and Volt/Hz**

Although there are over a hundred different manufacturers of VFDs, two main types of VFDs are produced by these manufacturers for use on blower motors. These two types are Vector and Volt/Hz. Vector VFDs can usually be run in either Vector mode or Volt/Hz mode. Vector VFDs are also typically slightly more expensive than Volt/Hz VFDs for a given size.

The advantage of Vector VFDs is that they provide more accurate torque control of the motor. This accurate torque control enables much more accurate speed control of the motor, especially at lower motor speeds. More accurate speed control of the motor enables more accurate, repeatable control of the airflow.

As mentioned earlier, the LMV52 employs a safety-related speed feedback on the blower shaft, thus continuously checking and adjusting (if necessary) the signal to the VFD to achieve the desired blower speed within a certain band. The LMV52 can lockout and shut down the burner if blower speed deviations are large and persist for too long. Due to their increased accuracy, Vector VFDs provide trouble-free operation on almost all LMV52 VFD blower applications. Volt/Hz VFDs can work satisfactorily in some applications, but are not preferred due to their decreased accuracy.

Vector VFDs are typically run in Open Loop Vector (OLV) mode. In this mode, the VFD uses a mathematical model of the motor combined with extremely accurate, fast scanning of the current and other data taken from the rotating motor. In reality, Open Loop Vector mode does have feedback, but the Vector VFD itself does not require a separate encoder to achieve this.

Since Vector VFDs use a mathematic model of the motor, and the design of motors differs somewhat between motor OEMs, a static or dynamic auto-tune is sometimes required so that the Vector VFD "learns" key aspects of the motor it is connected to. A static auto-tune (motor is not spun) does not require that the load (blower wheel) be de-coupled from the motor. A dynamic auto-tune (motor is spun) typically requires that the load (blower wheel) be de-coupled from the motor, which is not possible or practical in many situations. A dynamic auto-tune typically generates the best "learning" of the motor properties. A static auto-tune is typically all that is necessary if speed control issues are encountered on a Vector VFD.

## Centrifugal Blower Fundamentals

Since a centrifugal blower is the piece of machinery being controlled by the LMV52 and the VFD, a brief mention of its basic characteristics is warranted. Specifically, there are three fundamental "fan laws" that a person working on such equipment should be aware of. These are:

1. Air flow varies linearly with the speed of the blower. In other words, the CFM of the blower is directly proportional to the RPM of the blower.

$$\text{CFM (new)} = \frac{\text{RPM (new)}}{\text{RPM (old)}} \text{ x CFM (old)}$$

2. The static output pressure of the blower (SP) varies by the square of the change in RPM:

$$SP\ (new) = \left( \frac{RPM\ (new)}{RPM\ (old)} \right)^2 \times SP\ (old)$$

3. The required brake horsepower of the blower (BHP) varies by the cube of the change in RPM:

$$BHP\ (new) = \left( \frac{RPM\ (new)}{RPM\ (old)} \right)^3 \times BHP\ (old)$$

Example: A blower spinning at 1750 RPM produces 10 in WC of static pressure, 4500 CFM of flow, and requires 20 BHP. What happens if the RPM is increased to 2750 RPM?

Assumptions: Air damper is wide open, and system effects (such as the restriction due to the boiler's heat exchanger, the burner's diffuser, etc...) are not taken into account.

Flow: CFM (new) = (2750 / 1750) * 4500 = 7071 CFM

Pressure: SP (new) = $(2750 / 1750)^2$ * 10 = 24.7 in WC

Power: BHP (new) = $(2750 / 1750)^3$ * 20 = 78 BHP

**Configuring VFDs for use with the LMV52**

Modern VFDs typically have hundreds of parameters that can be set to tailor the VFD to a specific application. As mentioned earlier, there are also at least a hundred different manufacturers of VFDs, each of which have their own unique parameter list. Due to these two factors, SCC Inc. offers pre-programmed VFDs that can be purchased with the VFD parameters set up for use with an LMV52.

If a VFD for use with an LMV52 is purchased and programmed independently, the following points will serve as a general guideline for programming the VFD for the LMV52 application. Note that this guideline is necessarily general due to the variety of VFDs offered in the marketplace.

1. If a Vector VFD is used (recommended), set the "Control Method" to Open Loop Vector mode or equivalent.

2. The stopping method (after the run / stop contact is opened) should be set to "Coast to Stop" to let the motor coast to a stop after post-purge.

3. Reverse operation (the ability to reverse the motor with an input) should be disabled.

4. Configure the VFD to accept an external run / stop signal via the dry contact on the LMV52.

5. The VFD should be able to do a "flying start" so that the VFD will not try to stop a free-wheeling blower wheel before starting the wheel spinning again. Blower wheels frequently free-wheel due to draft and other factors.

6. Ramp times - the VFD should be set to slightly faster ramp times compared to the LMV52 ramp times (LMV52 parameters ***TimeNoFlame*** and ***OperatRampMod***). If the shorter LMV52 ramp time is set to 60 seconds, the ramp up and ramp down times in the VFD should be set no longer than 55 seconds. In general, a 5 second differential will work well in most situations.

   **Note: If short ramp times are necessary with large blowers (heavy blower wheels), a braking resistor may be necessary. See the braking resistor explanation on the previous pages.**

7. Ramps must be linear with the 4-20mA signal. S-shaped ramps and PID / filtering on the 4-20mA signal will cause speed faults on the LMV52.

8. The analog signal should be configured for a 4-20mA signal and it should be spanned so that 4mA = 0Hz and 20mA = 62Hz (for blowers designed for 60 Hz power). The additional 2Hz is to make sure that full blower speed is achievable even with a 19.5 mA standardization (see standardization section below).

9. The motor nameplate data must be entered for the motor that the VFD is connected to.

10. Some VFDs have a feature that will stop ramping the drive if a critical limit in the drive is approached. On some VFDs, this feature is referred to as "stall prevention". Two common limits are the maximum amperage drawn and the DC bus voltage. Stall prevention, while protecting the drive, can cause speed faults with the LMV52 due to the drive ceasing to ramp in concert with the LMV52. If a braking resistor is used, stall prevention can typically be deactivated.

11. For Vector VFDs, perform at least a static auto-tune so that the VFD "learns" the characteristics of the motor it is connected to. A static auto-tune does not require that the load (blower wheel) be disconnected since the load is not spun. Some dynamic auto-tunes require that the load is disconnected.

12. If a braking resistor is being used, the braking resistor will typically have a high temperature switch. The drive should be programmed and wired so that a braking resistor over temperature will cause the drive to shut down.

### Standardizing the LMV52

After the LMV52, VFD, blower, and speed sensor are installed and wired correctly (see Section 2), and the VFD parameters are set correctly, the LMV52 must be standardized.

This only needs to be done once, as long as there are not changes to the VFD and / or blower. If any changes are made (including VFD programming), it is recommended to re-standardize so that the LMV52 can "learn" the change that was made.

The purpose of the standardization (calibration) procedure is to establish the relationship between the LMV52 analog output signal (4-20mA) and the blower speed, as read by the speed sensor connected to the LMV52. This is done by recording a blower speed with 19.5 mA applied to the VFD. Once started, basic steps in the standardization are as follows:

1. The air damper is opened to pre-purge position.
2. The run / stop dry contact in the LMV52 is closed.
3. An analog signal of 19.5 mA is applied to the VFD.
4. The VFD / blower ramp up to speed. After the speed has stabilized, the actual peak RPM is recorded by the LMV52.
5. The analog signal is returned to minimum (typically 4 mA).
6. The run / stop dry contact in the LMV52 is opened.
7. The air damper is returned to home position.

A typical standardization process for a 2-pole (~3600 RPM) blower is shown graphically in Figure 5-3. If a standardization was performed on a 4-pole (~1800 RPM) blower, the procedure would be similar but the blower speed achieved at 19.5 mA would be approximately 1750 RPM.

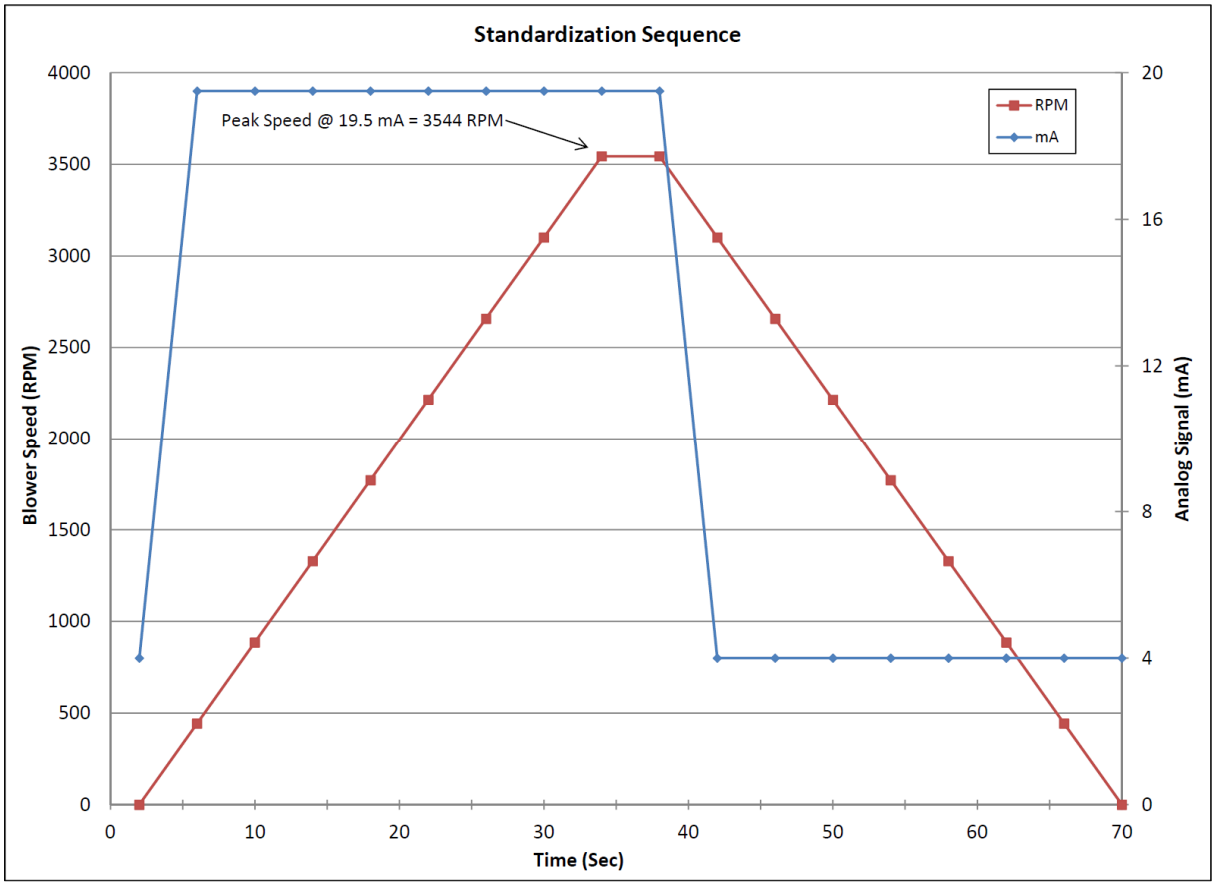


| Time (sec) | LMV52 output to VSD (mA) | Blower Shaft Speed (RPM) | VFD output Freq. (Hz) |
|---|---|---|---|
| 2 | 4 | 0 | 0 |
| 6 | 19.5 | 443 | 7.5 |
| 10 | 19.5 | 886 | 15.0 |
| 14 | 19.5 | 1329 | 22.5 |
| 18 | 19.5 | 1772 | 30.0 |
| 22 | 19.5 | 2215 | 37.5 |
| 26 | 19.5 | 2658 | 45.0 |
| 30 | 19.5 | 3101 | 52.5 |
| 34 | 19.5 | 3544 | 60.0 |
| 38 | 19.5 | 3544 | 60.0 |
| 42 | 4 | 3101 | 52.5 |
| 46 | 4 | 2658 | 45.0 |
| 50 | 4 | 2215 | 37.5 |
| 54 | 4 | 1772 | 30.0 |
| 58 | 4 | 1329 | 22.5 |
| 62 | 4 | 886 | 15.0 |
| 66 | 4 | 443 | 7.5 |
| 70 | 4 | 0 | 0.0 |

**Figure 5-3: Standardization Process for a 2-Pole Blower Motor (values are approximate)**

**NOTE: The total time of the standardization shown in Figure 5-3 is 70 seconds with a VFD ramp time of 30 seconds. Longer VFD / LMV52 ramp times will increase the total time taken for the standardization.**

**NOTE: The VFD is spanned so 20mA = 62Hz. Thus, 19.5mA is approximately 60Hz.**

Based off of the RPM that was read at 19.5 mA (in this case 3544 RPM) and an assumption of 0 RPM at minimum signal (typically 4mA), a two point linear interpolation is automatically done by the LMV52, which establishes the linear relationship between the analog signal and the blower RPM . This relationship is shown in Figure 5-4.

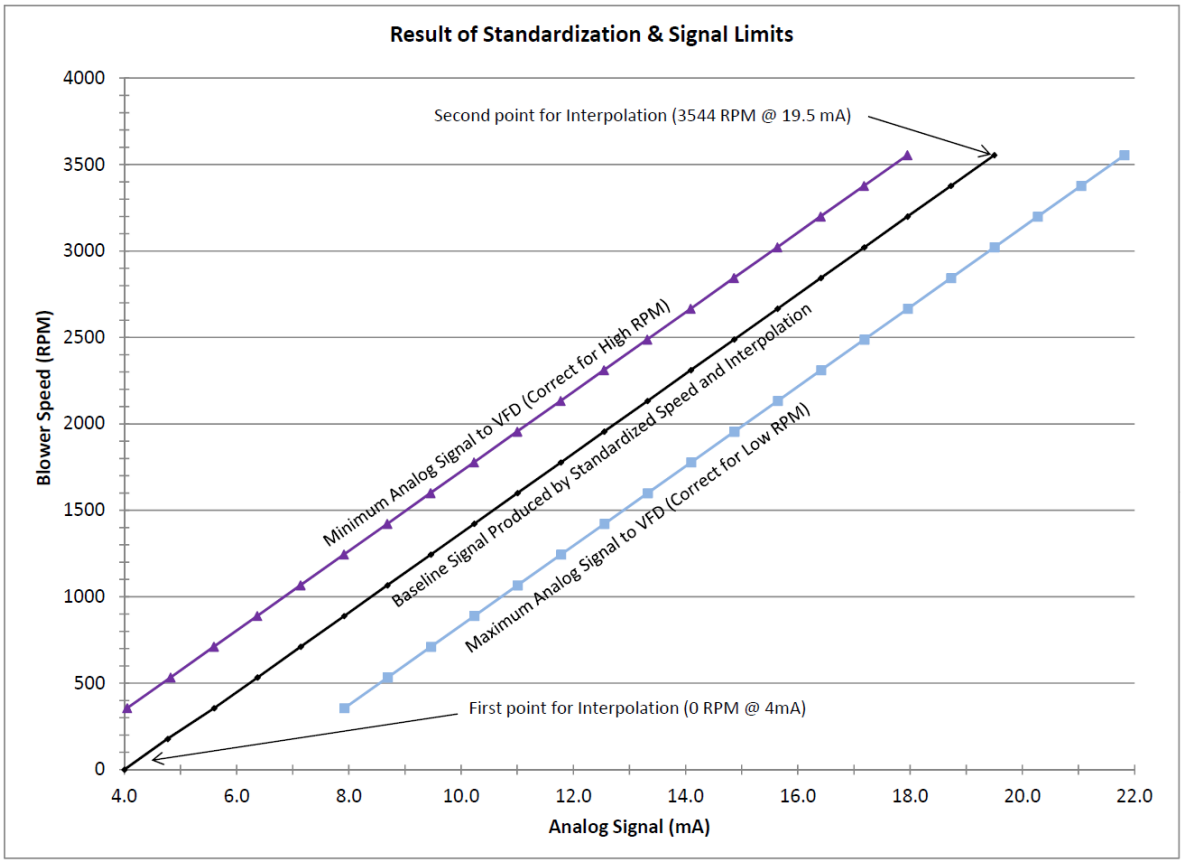


**Figure 5-4: Result of Standardization (2-pole blower motor) and Analog Signal Correction Limits**

When the burner is in operation, the LMV52 has active, closed-loop control of the blower motor speed and can compensate for motor slip and other factors within limits. The analog signal can be increased to compensate for low blower RPM and decreased to compensate for high blower RPM. These analog signal limits are also shown in Figure 5-4.

If the analog signal is increased to the maximum allowable signal and the blower RPM is still low, a message will be displayed on the AZL that states “Fan speed not reached”.

If the analog signal is decreased to the minimum allowable signal and the blower RPM is still high, a message will be displayed on the AZL that states “Control range limitation VSD Module”.

The reason that the standardization is done at 19.5mA instead of at 20mA is to give the LMV52 some additional "room" to increase the analog signal for a low RPM condition at high fire. Because the standardization is done at 19.5mA, the analog input on the VFD is spanned so that 20mA = 62 Hz. This is done so that the blower will still achieve full 60 Hz blower speed at high fire on jobs where the blower is just large enough.

**NOTE: Most VFDs can be scaled to output 400 Hz or more. Consult the blower and / or motor manufacturer before over-speeding the motor and blower, since blower wheels and motor rotors can catastrophically fail if RPM limits are exceeded.**

In addition to limits on how much the 4-20mA signal can be compensated, the LMV52 also has limits on how far the blower speed can deviate from the standardized speed line. The next section explains how the blower speed is monitored when the burner is in operation.

## Blower Speed Monitoring

Blower speed has a large impact on the airflow delivered to the burner and thus the fuel-air ratio. Fuel-air ratios must be kept in a safe range while a flame is present in the boiler. If the fuel-air ratio cannot be kept in a safe range, the burner must be shut down.

To help ensure that the burner is either operated at a safe fuel-air ratio or is shut down, the blower speed is constantly monitored while a flame is present in the boiler. The speed is monitored so that nuisance shutdowns are eliminated, but fast shutdowns will occur if the speed deviation is large. To do this, the LMV52 evaluates the magnitude of the speed deviation in combination with how long the speed deviation exists. To accomplish this, three distinct bands and one limit centered about the standardized speed line are used. These bands are:

1. **Neutral Band** - if the speed is within this band, it is considered to be OK and no action is taken. The width of this band is +/- 0.5% of the standardized speed.

2. **Low Risk Band** - if the speed is within this band, the analog signal to the VFD is adjusted to bring the speed back into the Neutral Band. If the Neutral Band speed cannot be achieved in 8 seconds, a lockout will occur. The width of this band is +/- 2.0 % of the standardized speed.

3. **Outside Low Risk Band** - if the speed is outside the Low Risk Band but does not exceed the High Risk Limit, the analog signal to the VFD is adjusted to bring the speed back into the Low Risk Band and then ultimately into the Neutral Band. The width of this band varies with the setting of the High Risk Limit (parameter ***TolQuickShutdown***). If the Low Risk Band speed cannot be achieved in 3 seconds, a lockout will occur.

4. **High Risk Limit (parameter *TolQuickShutdown*)** - if the speed exceeds the High Risk Limit threshold for more than 1 second, a lockout will occur. This limit is determined by parameter ***TolQuickShutdown***, which can be set by the burner OEM. The default setting is +/- 10% of the standardized speed.

Figure 5-5 illustrates the same blower that was standardized in Figure 5-3, this time ramping from low fire to high fire when the burner is operating. The black line is the standardized speed line (the same line as shown in Figure 5-4). The lines surrounding the black line are the different speed monitoring bands. The width of each band in % and the time permitted in each band is shown in Figure 5-5.

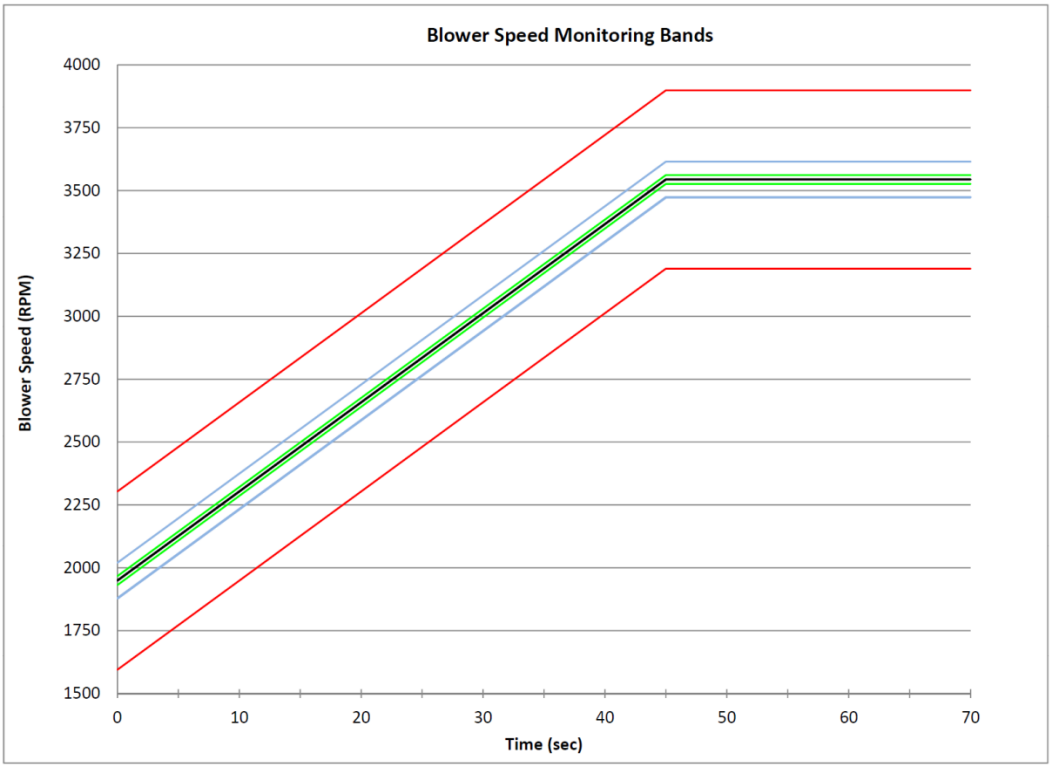


| Name and Timing of Speed Band | | | | Neutral Band No Time Limit | | Low Risk Band 8 seconds | | Outside Low Risk Band - 3 seconds | | High Risk Limit 1 second | |
|---|---|---|---|---|---|---|---|---|---|---|---|
| High Limit of Speed Band | | | | +0.5% | | +0.5% to +2.0% | | +2.0% to +10% | | 10% or greater | |
| Low Limit of Speed Band | | | | -0.5% | | -0.5% to -2.0% | | -2.0% to -10% | | -10% or less | |
| RPM Tolerance for Std. Speed of 3544 | | | | +/- 18 | | +/- 71 | | +/- 213 | | +/- 354 | |
| | Time (sec) | VSD (%) | Standarized speed line RPM | Max RPM | Min RPM | Max RPM | Min RPM | Max RPM | Min RPM | Max RPM | Min RPM |
| RAMP UP | 0 | 55 | 1949 | 1967 | 1931 | 2020 | 1878 | 2303 | 1877 | 2304 | 1595 |
| | 5 | 60 | 2126 | 2144 | 2109 | 2197 | 2056 | 2480 | 2055 | 2481 | 1772 |
| | 10 | 65 | 2304 | 2321 | 2286 | 2374 | 2233 | 2657 | 2232 | 2658 | 1949 |
| | 15 | 70 | 2481 | 2499 | 2463 | 2552 | 2410 | 2834 | 2409 | 2835 | 2126 |
| | 20 | 75 | 2658 | 2676 | 2640 | 2729 | 2587 | 3011 | 2586 | 3012 | 2304 |
| | 25 | 80 | 2835 | 2853 | 2817 | 2906 | 2764 | 3189 | 2763 | 3190 | 2481 |
| | 30 | 85 | 3012 | 3030 | 2995 | 3083 | 2942 | 3366 | 2941 | 3367 | 2658 |
| | 35 | 90 | 3190 | 3207 | 3172 | 3260 | 3119 | 3543 | 3118 | 3544 | 2835 |
| | 40 | 95 | 3367 | 3385 | 3349 | 3438 | 3296 | 3720 | 3295 | 3721 | 3012 |
| | **45** | **100** | **3544** | 3562 | 3526 | 3615 | 3473 | 3897 | 3472 | 3898 | 3190 |
| HIGH FIRE | 50 | 100 | 3544 | 3562 | 3526 | 3615 | 3473 | 3897 | 3472 | 3898 | 3190 |
| | 55 | 100 | 3544 | 3562 | 3526 | 3615 | 3473 | 3897 | 3472 | 3898 | 3190 |
| | 60 | 100 | 3544 | 3562 | 3526 | 3615 | 3473 | 3897 | 3472 | 3898 | 3190 |
| | 65 | 100 | 3544 | 3562 | 3526 | 3615 | 3473 | 3897 | 3472 | 3898 | 3190 |
| | 70 | 100 | 3544 | 3562 | 3526 | 3615 | 3473 | 3897 | 3472 | 3898 | 3190 |

**Figure 5-5: Blower Speed Monitoring Bands**

## Suggested Setup Procedure for the VFD Control

After verifying that all VFD related components are installed and wired correctly, the VFD control can be set up. Naturally, if the burner has a VFD, this must be done before the Ratio Control Curves are commissioned.

Particular attention should be paid to the following points:

1. The arrow on the speed wheel points in the same direction as the correct blower rotation.
2. The gap between the inductive sensor and the speed wheel finger is correct (approx. 1/16").
3. The VFD, motor, and LMV52 share a common ground.
4. The analog signal from the LMV52 to the VFD must be in shielded cable with one end of the shield grounded.

After these points are double-checked, the LMV52 parameters can be set.

1. Activate the VFD. The VFD control can be activated / deactivated for either fuel in a dual fuel burner. Typically, if a burner has a VFD, it will be activated on each fuel. The VFD can be activated using the following menu path:

   *Params & Display > RatioControl > Gas/Oil Setting > VSD*

2. Set the air actuator to be “air influenced”. This is done so that the air damper will open to pre-purge position when the LMV52 is standardized. This can be done using the following menu path:

   *Params & Display > RatioControl > Gas/Oil Settings > AirActuator* = **air influen**

3. Set or check the LMV52 ramp times. Both of these must be at least 5 seconds longer than the ramp times set in the VFD. The ramp times can be checked using the following menu path:

   *Params & Display > RatioControl > Times > OperatRampMod*
   *Params & Display > RatioControl > Times > TimeNoFlame*

4. If using a 6-finger speed wheel (rarely necessary - only if the VFD will be operated under 300 RPM), change the number of pulses per revolution from 3 to 6 using the following menu path:

   *Params & Display > VSD Module > Configuration > Speed > Num Puls per R*

5. Configure the analog output of the LMV52 to match the analog input of the VFD. Typically, a 4-20mA signal is used. The analog output signal can be set using the following menu path:

   *Params & Display > VSD Module > Configuration > Speed > Setpoint Output*

6. If the VFD was not purchased pre-programmed for an LMV52, set the relevant VFD parameters. See section on previous pages titled "Configuring VFDs for use with the LMV52".

7. If working on an un-configured LMV52, parameters unrelated to the VFD must be set before the VFD can be standardized. These are thoroughly outlined in Section 4 under "Configuring (Parameterization of) an LMV5 with a Default Parameter Set". To summarize, the following must be set: burner ID, fuel train, actuator addresses, actuator directions of rotation, and actuator special positions.

8. The LMV52 safety loop must be closed (high limit, low water, burner flange, etc...) or the standardization will not occur even if the LMV52 is not in alarm.

9. The burner switch must be off (LMV52 input X5-03.1 must be de-energized).

10. The VFD must be in remote mode so that it will respect the run-stop contact and the analog signal from the LMV52.

11. The LMV52 / VFD / blower are now ready to be standardized. The standardization process can be initiated using the following menu path:

    *Params & Display > VSD Module > Configuration > Speed > Standardization*

    Set parameter ***Standardization*** to “activated”. The air damper should then drive to the pre-purge position and the VFD / blower should ramp up to approximately 60 Hz (100% VFD). After a few seconds at 60 Hz, the VFD / blower should ramp back down to 0 Hz. The air damper should also drive back to home position.

12. Check the standardized speed, which is the product of the standardization, using the following menu path:

    *Params & Display > VSD Module > Configuration > Speed > StandardizedSp*

    For 2-pole blowers, the standardized speed should be 3500 RPM, +/- 100 RPM. If the speed is out of this range, the drive was most likely not spanned so that 20mA = 62Hz, or the motor is heavily loaded (a lot of slip). The same logic applies to 4-pole motors, except the speed should be 1700 +/- 100 RPM.

13. If the LMV52 does not have $O_2$ trim, the air damper actuator can be set back to “activated” instead of “air influen” using the following menu path:

    *Params & Display > RatioControl > Gas/Oil Settings > AirActuator* = **activated**

## Additional Tips for Burners with VFD Control

- Most of the time, speed faults that are seen on the LMV52 are caused by the VFD not being able to decelerate the blower when the blower is being ramped down. If fast ramp times are not critical for the application, ramp times can be increased and this should correct the issue. If fast ramp times are necessary, a braking resistor may also be required to achieve the fast ramp down times.

- The LMV52 / VFD / blower response can be watched to check for proper operation. This can be done in standby Phase 12 (burner off) by using the following menu path:

  *Params & Display > RatioControl > Gas/Oil Settings > CurveParams* or *Curve Settings*

  When the blower is at a speed other than what is displayed, an arrow (>) is displayed on the AZL next to the VFD position. When the blower is at the displayed speed, a colon (:) is displayed on the AZL next to the VFD position. By ramping the VFD up and down, the response of the VFD can be observed. Transitioning back and forth between a colon (:) and a (>) after ramping the VFD up or down indicates a speed control issue.

- The LMV52's closed loop speed control is based on PI (proportional-integral) logic. The response of this loop can be tuned using the following menu path:

  *Params & Display > VSD Module > Configuration > Speed > Setteling Time*

  In most cases, this does not need to be tuned. See Section 3 (Parameters) for a full explanation.

- The absolute speed as read in real time by the speed wheel can be watched at any point in time. When the LMV52 is not modulating or when it is at a fixed VFD speed (pre-purge, post-purge, ignition, etc.), the speed should be steady, not deviating by more than +/- 10 RPM. This can be viewed at:

  *Params & Display > VSD Module > Configuration > Speed > Absolute Speed*

- The combustion air pressure switch should be set by taking the VFD to 10% below the lowest anticipated low fire speed (if low fire is 50%, take the VFD to 40%) and setting the switch to open at that point. This should maximize the safety potential of the combustion air pressure switch and minimize nuisance trips. This can be done in standby by setting the home position of the VFD to 40% and setting the switch.

- In most applications with an air damper, there is little reason to decrease blower speed below about 50% VFD (30 Hz). Power consumption decreases by the cube of the RPM even without the additional restriction of an air damper. Referencing information from the "Centrifugal Blower Fundamentals" section on the previous pages, decreasing the speed of a 25 HP (18.62 kW) motor from 3600 RPM (60 Hz) to 1800 RPM (30 Hz) will cause the power consumption to be reduced from 18.62 kW down to 2.32 kW, an electrical savings of over 800%.

- A VFD alone without an air damper or sliding head offers limited accuracy and repeatability for the airflow at higher burner turndowns. For most boiler burners, modulating the VFD alone without an air damper is okay for turndowns of 4-to-1 or less. Using only a VFD for airflow regulation at higher turndowns may lead to airflow repeatability issues.

Intentionally Left Blank

| | |
|---|---|
| Section 1 | Overview |
| Section 2 | Wiring |
| Section 3 | Parameters |
| Section 4 | Commissioning |
| Section 5 | VSD |
| **Section 6** | **$O_2$ Trim** |
| Section 7 | Troubleshooting |
| Section 8 | Modbus |
| Section 9 | ACS450 |
| Section 10 | Revision History |
| Appendix A | Application Guide |
| Appendix B* | Complimentary Products Guide |


*Can be found at www.scccombustion.com.

HOME

| | |
|---|---|
| Section 1 | Overview |
| Section 2 | Wiring |
| Section 3 | Parameters |
| Section 4 | Commissioning |
| Section 5 | VSD |
| **Section 6** | **$O_2$ Trim** |
| Section 7 | Troubleshooting |
| Section 8 | Modbus |
| Section 9 | ACS450 |
| Section 10 | Revision History |
| Appendix A | Application Guide |
| Appendix B* | Complimentary Products Guide |


*Can be found at www.scccombustion.com.

HOME

# Section 6: Oxygen Trim

**Table of Contents**

Introduction ..... 2
$O_2$ Trim ($O_2$ Control) Fundamentals ..... 2
Pre-control ..... 4
$O_2$ Trim Terminology ..... 4
$O_2$ Control and $O_2$ Alarm Curves ..... 6
$O_2$ Trim Configuration (Parameterization) Before Commissioning ..... 7
Suggested $O_2$ Trim Commissioning – Traditional Nozzle Mixing Burner with No or Low Percentage FGR (Typically LMV52.240) ..... 9
Suggested $O_2$ Trim Commissioning – Premix Mesh Burner or Nozzle Mixing Burner with High Percentage of FGR (Typically LMV52.440) ..... 14
Post Commissioning Tuning ..... 20
Observing the Behavior of the $O_2$ Trim ..... 24
Using the $O_2$ Alarm Functionality without $O_2$ Trim ..... 25
How the $O_2$ is Measured with the QGO20 Sensor and PLL52 Module ..... 26
Considerations when Using $O_2$ Trim with FGR ..... 29
Additional Tips for $O_2$ Trim Commissioning and Tuning ..... 33

## Introduction

The LMV52.240 and the LMV52.440 both have $O_2$ (oxygen) trim and $O_2$ alarm (previously called "monitor") capability. In addition, the LMV52.440 offers advanced features such as temperature compensated light-off and more dynamic $O_2$ trim capabilities. In general, the LMV52.440 is recommended for more difficult applications such as low and ultra-low NOx burners where the burner stability band is much smaller than a traditional nozzle mixing burner. Some features in the LMV52.440 were specifically designed for ultra-low NOx mesh burners.

The $O_2$ trim functions by using an in-situ $O_2$ sensor installed in the boiler stack, and then adjusting actuators and / or VSD to maintain a % $O_2$ setpoint. Only air-related (air influenced) actuators are adjusted, thus the $O_2$ trim does not adjust the firing rate (fuel-related load). Only the air rate (air-related load) is adjusted.

Each Ratio Control Curve Point that is entered (see Section 4) will have a corresponding $O_2$ trim setpoint, rich limit ($O_2$ alarm) and lean limit ($O_2$ max value). The exception to this rule is that $O_2$ trim cannot be performed on Point 1. If 10 points are entered on the Ratio Control Curve, there will be 9 trim points and 10 rich limit ($O_2$ alarm) points. Having 10 points on the Ratio Control Curve is recommended.

As is the case with advanced systems such as $O_2$ trim, the fundamental systems that lie underneath the advanced system must be in place and working correctly to enable the advanced system to work correctly. For example, if the gas pressure supply is not repeatable upstream of the firing rate control valve (fundamental system), then the $O_2$ trim (advanced system) is likely to deactivate. The fundamental systems on the burner / boiler that must be working correctly are outlined in detail in the Pre-Requisites listed in Section 4. The Pre-Requisites for LMV52 systems with $O_2$ trim must be met before $O_2$ trim commissioning is attempted.

If the Pre-Requisites are satisfied, then reliable operation of the $O_2$ trim depends on correct parameter settings for the application and correct commissioning of the $O_2$ trim. This section will outline the basics behind how the $O_2$ trim system operates, and will outline the typical commissioning procedure for a traditional nozzle mixing burner (standard emissions) and a pre-mix mesh burner (low or ultra-low NOx). Nozzle mixing burners that use a high percentage of FGR to achieve low NOx typically behave in a way that is similar to a pre-mix mesh burner, so the commissioning procedure for these types of burners is similar to a pre-mix mesh burner.

## $O_2$ Trim ($O_2$ Control) Fundamentals

By definition, an $O_2$ trim ($O_2$ control) system monitors the level of $O_2$ in the exhaust gases of the boiler and adjusts the fuel or air flow to maintain an $O_2$ setpoint. The LMV52 accomplishes this task by reading the %$O_2$ (wet basis) with an in-situ $O_2$ sensor and by adjusting the angular position of air flow influencing actuators. If the burner is equipped with a VSD (variable speed drive) for the blower, the $O_2$ trim can also adjust the blower speed to influence the burner airflow.

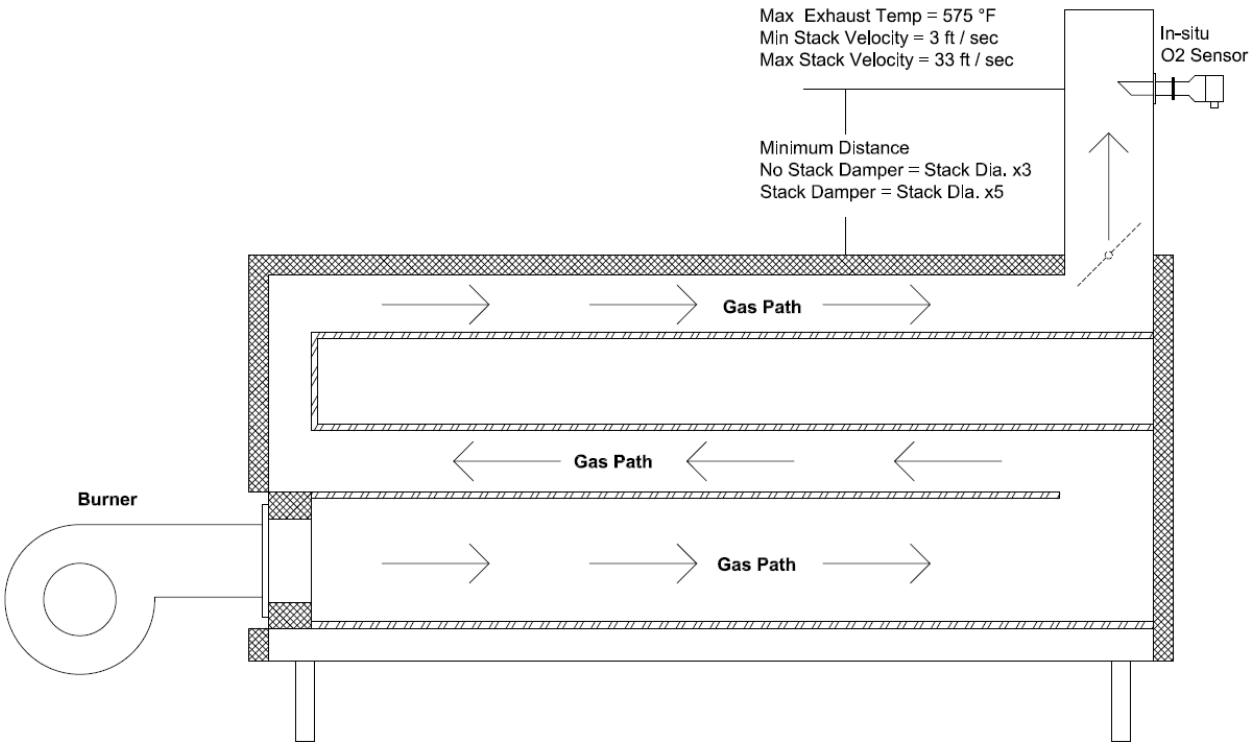


**Figure 6-1: Physical Arrangement of Burner, $O_2$ Sensor, and Gas Path**

Since the $O_2$ sensor is located in the boiler's exhaust (stack), there always exists a delay time (Tau time) between when air flow is adjusted at the burner and when the change is detected by the $O_2$ sensor. This physical reality forces the $O_2$ trim to use "old" $O_2$ readings, which will be discussed later. The delay time depends on the length of the gas path through the boiler and the velocity of the gas. The length of the gas path is fixed for a given boiler, but the gas velocity depends upon the firing rate. Higher firing rates equate to higher gas velocities and smaller delay times (Tau times).

If the fuel flow increases linearly with the firing rate (the load number accurately reflects the fuel flow), the Tau time will decrease in a predictable manner as the firing rate increases. Likewise, given an accurate load number, the Tau time will increase in a predictable manner as the firing rate decreases. This enables the Tau time to be automatically calculated at every point from Point 2 to high fire. Once the Tau time is calculated for every point from Point 2 to high fire, the PI (proportional + integral) response for the $O_2$ trim can be automatically calculated for every point between Point 2 and high fire.

Another place where the Tau time must be accounted for is at startup. Immediately before main flame ignition, the gas path of the boiler is full of air. To get a representative $O_2$ reading that can be used for trimming, the gas path of the boiler must be full of products of combustion (exhaust gases). Thus, the main flame of the burner must be ignited and the burner must be running for a period of time to flush out all of the air. The time it takes to flush out this air is estimated by taking the Tau time (at Point 2) times a multiplier. For example, if the Tau time at Point 2 is measured to be 6 seconds, then the time it takes to get a representative $O_2$ reading after light off might be 6 x 6 = 36 seconds. In this example, closed loop $O_2$ trim cannot occur until 36 seconds after light off. This is precisely where the temperature compensation functionality is used for some burners (LMV52.440 only).

For many nozzle mixing burners (traditional boiler burners), the $O_2$ setpoint will be a higher value at low fire and a lower value at high fire. This is true since most nozzle mixing burners need more excess air (higher $O_2$) at low fire to achieve complete combustion. For this type of burner an $O_2$ setpoint of 5% $O_2$ (wet) at low fire and an $O_2$ setpoint of 2% $O_2$ (wet) at high fire is not uncommon.

**Pre-control**

As mentioned above, all $O_2$ trim systems with an $O_2$ sensor in the boiler's exhaust must use "old" $O_2$ readings due to physical realities of the boiler. This fact, combined with an $O_2$ setpoint that typically varies from low fire to high fire means that the $O_2$ trim system cannot actively trim when the burner makes a large change in firing rate. This begs the question of what happens to the $O_2$ trim when the burner transitions from 20% firing rate to, say, 80% firing rate. The answer is the $O_2$ trim changes modes from active trim to what is referred to as "pre-control".

Pre-control is possible because the LMV52 learns the characteristic of the burner at each point on the curve during the $O_2$ trim commissioning. The specific characteristic that the LMV52 learns is how much of a change in airflow (air rate) is necessary to achieve a certain change in the $\%O_2$. This specific characteristic is known as the Lambda Factor, and is essentially the burner's signature from an $O_2$ trim standpoint. Just like the delay time (Tau time) that was mentioned earlier, it is necessary for the fuel flow to match the load number so that the Lambda Factor is correct and accurate for each point.

Pre-control uses the Lambda Factor so that the burner can be modulated while keeping the $\%O_2$ close to the $O_2$ setpoint, even though the setpoint changes with the firing rate and the $O_2$ trim is using "old" $O_2$ readings. Once the burner stops modulating or only modulates a small amount (+/- 5%), the $O_2$ trim will change modes back to "active" and perform active $O_2$ trim once again.

A properly commissioned $O_2$ trim system will typically maintain the $\%O_2$ setpoint with a deviation of +/- 0.1% $O_2$ when the burner is not modulating a significant amount (+/- 5% load change). With this small load change, the $O_2$ trim will stay in the "active" mode. When significant modulation is encountered (+/- 15% load change), the pre-control will engage and the deviation from setpoint will increase. Deviations of +/- 0.3% or less are typical during modulation when the pre-control is engaged.

## $O_2$ Trim Terminology

1. **$\%O_2$ Wet** – In-situ $O_2$ sensors, like the QGO20 sensor that is used with the LMV52, read the $\%O_2$ on a wet basis. This is in contrast to the vast majority of portable combustion analyzers that read $\%O_2$ on a dry basis. $\%O_2$ wet should always be a lower value than $\%O_2$ dry. Figure 6-11 (located later in this section) gives the approximate relationship between $\%O_2$ wet and $\%O_2$ dry.

2. **Tau Time** - This is the delay time between when an adjustment is made at the burner (moving the air damper, etc.) and when that adjustment is read at the $O_2$ sensor. For a given burner / boiler, this time will be shorter at high fire and longer at low fire.

3. **$O_2$ Ratio Control** - This is the measured $\%O_2$ wet when the actuators / VSD are on the Fuel-Air Ratio Control Curve and are not being trimmed. This is recorded for each point on the curve except Point 1. This is also commonly referred to as the “lean curve”.

4. **$O_2$ Control** - This is the setpoint of the $O_2$ trim system for each point on the curve except Point 1. This is also commonly referred to as the “trim curve”.

5. **$O_2$ Alarm** - This is the rich $O_2$ limit for each point. Every Fuel-Air Ratio Curve point including Point 1 must have a corresponding $O_2$ alarm point. This is also commonly referred to as the “rich curve” or “rich alarm”.

6. **$O_2$ Max Value** - This is the lean $O_2$ limit, and is a single value for all points. This is also referred to as the “lean alarm”.

7. **Lambda Factor** - A value that is learned by the LMV52 for each point on the curve except Point 1. This value is learned when the $O_2$ control curve is being set, and is based on how the measured $\%O_2$ responds when the burner is being transitioned from an $O_2$ Ratio Control point to the $O_2$ Control point during $O_2$ Control commissioning. This value represents how much the air flow needs to be changed to get a change in the measured $\%O_2$, and is essentially the "signature" of the burner from an $O_2$ trim perspective.

8. **Fuel Rate –** This is the percentage of high fire fuel flow and is also referred to as the firing rate. This is also the same as the "Load" number seen during Ratio Control Curve commissioning. For a 10-to-1 turndown burner, high fire would be 100% and low fire would be 10%. For a 4-to-1 turndown burner, high fire would be 100% and low fire would be 25%. For $O_2$ trim systems, it is very important that the fuel rate (load number) matches the actual fuel flow to the burner within +/- 3%.

9. **Air Rate** - When no $O_2$ trim is taking place (running on Ratio Control Curve), the air rate is the same as the fuel rate. This is also known as the air flow. For example, a 10-to-1 turndown burner running at Point 5 on the Ratio Control Curve will have a fuel rate of 50% and an air rate of 50%. If the $O_2$ trim is engaged and the $O_2$ sensor reads values higher than setpoint, the air rate will be reduced relative to the fuel rate until the setpoint is achieved.

10. **Standardized Value** - This is a percentage reduction of the air rate and is used when the $O_2$ Control Curve is being set. For example, if the air rate is 50%, and a Standardized Value of 10% is entered, the air rate will be reduced to 45%. The math would be: (50% * 10% = 5%), then (50% -5%) = 45%.

11. **Pre-Control** - When large load changes occur during modulation, this will engage and temporarily disable the closed-loop $O_2$ trim. This temporary "open-loop" trim is based on using a correct Lambda Factor to predict how the burner will react when modulating. Pre-control is necessary for burners where the $O_2$ setpoint is not constant from low fire to high fire.

## $O_2$ Control and $O_2$ Alarm Curves

When the $O_2$ system is commissioned, curves and parameters must be set to define how the system will operate. When set correctly, the curves seen in Figure 6-2 will achieve the following:

1. Establish a safe operating envelope for the burner.
2. Ensure repeatable $\%O_2$ levels in the boiler exhaust with changing ambient conditions:
   a. To consistently operate at peak efficiency (lowest $\%O_2$ and excess air)
   b. For reliable operation while meeting emissions requirements (low and ultra-low NOx)

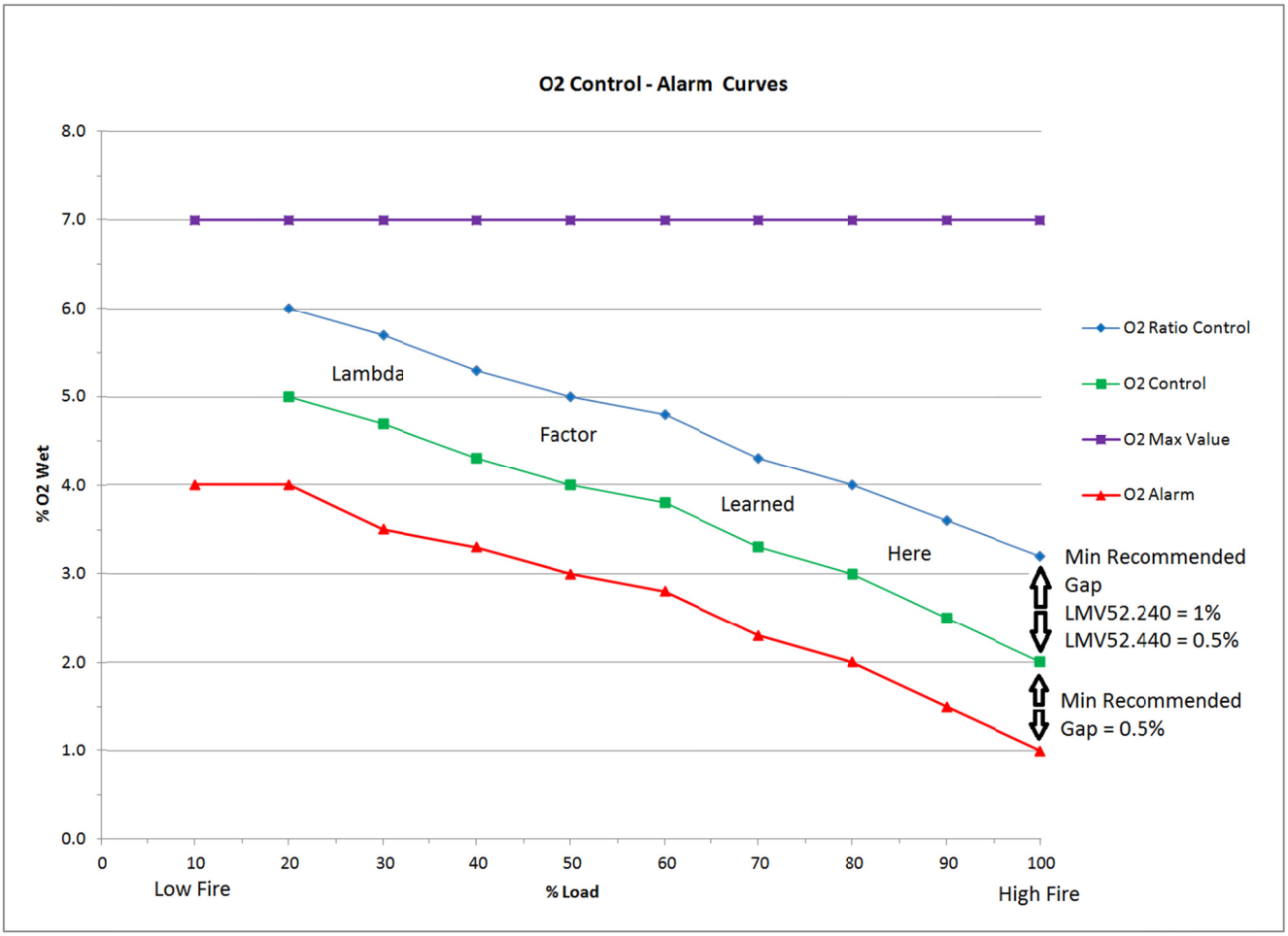


**Figure 6-2: $O_2$ Control and $O_2$ Alarm Curves**

As seen in Figure 6-2 above, parameter ***$O_2$ MaxValue*** sets the fuel lean boundary for the burner and the $O_2$ Alarm Curve sets the fuel rich boundary for the burner. These must be set in such a way so that unsafe / unstable operation of the burner is not permitted. However, being too conservative with these boundaries will handicap the system and cause nuisance deactivations of the $O_2$ trim. General guidelines for these settings will be discussed later in this section. These two curves together set the safety envelope for the burner from a $\%O_2$ standpoint.

The $O_2$ Ratio Control Curve reflects the $\%O_2$ that resulted from setting the Fuel-Air Ratio Control Curve. The $O_2$ Control Curve is the target for the $O_2$ trim system when it is activated. When the burner is transitioned from the $O_2$ Ratio Control Curve to the $O_2$ Control Curve by increasing the Standardized Value, the Lambda Factor will be learned and recorded at that specific point. A larger gap between the $O_2$ Ratio Control Curve and the $O_2$ Control Curve will give the LMV52 the best opportunity to learn the Lambda Factor of the burner, and thus yield the best pre-control when the burner is modulating. A gap of 1% $O_2$ or more is ideal, and it is typically achievable on nozzle mixing burners with no or low percentages of FGR. A 1% gap is typically not achievable on premix mesh burners or on nozzle mixing burners that use a high percentage of FGR. This gap also sets the available quantity of "lean" trim for an LMV52.240, and that is why the minimum recommended gap for an LMV52.240 is 1%. The LMV52.440 uses a different $O_2$ trim algorithm for premix, mesh and high percentage FGR burners and can deal with a minimum gap of 0.5%.

## $O_2$ Trim Configuration (Parameterization) Before Commissioning

The procedure below assumes an LMV52 with default parameters for the *O2 Contr/Alarm* menu and the *O2 Module* menu. If the LMV52 is mounted to a burner / boiler, the burner / boiler OEM may have already changed the parameters from the default setting and parameterized the LMV52 for the application. This procedure also assumes that all $O_2$ trim components are installed and wired correctly, and that the $O_2$ trim will be commissioned on natural gas.

Section 3 gives a detailed explanation of all of the parameters in the LMV52 as well as highlights which parameters must be set (marked with a double asterisk **) and which parameters are frequently used (shaded).

This procedure gives a general guideline of what parameters need to be set on both a traditional nozzle mixing burner with little to no FGR, and also for low and ultra-low NOx burners that are pre-mix mesh type or high percentage FGR. Every burner is different, so it is likely that every burner will need a somewhat unique parameter set to run correctly.

1. Log in at the OEM password level. From the factory, the OEM password for the LMV5 is "START".

2. If not done so already, activate the $O_2$ sensor using the following menu path:

   *Params & Display > O2 Module > Configuration > O2 Sensor* = **QGO20**

3. If being used, configure the appropriate temperature sensors for blower inlet air temperature and stack temperature. This is done through the following menu path:

   *Params & Display > O2 Module > Configuration > SupAirTempSens*
   *Params & Display > O2 Module > Configuration > FlueGasTempSens*

   Parameter ***SupAirTempSens*** activates and configures the blower inlet air temperature sensor. Parameter ***FlueGasTempSens*** activates and configures the stack temperature sensor. Options are Ni1000 or Pt1000 2-wire sensors for both inputs.

**NOTE: Both sensors are required to do a boiler efficiency calculation. The boiler efficiency calculation is not required for $O_2$ trim operation. If sensors are activated but not reading correctly or not wired correctly, the $O_2$ trim will not activate. Burner inlet temperature must be read to perform a temperature-compensated startup on the LMV52.440.**

4. Set the appropriate actuators to “air influen” (air influenced). These are typically only the actuators / VSD that will directly influence the burner air rate. The menu path for these parameters is:

   *Params & Display > RatioControl > Gas Settings*

   Typically, only the air actuator and the VSD (if used) are set to air influenced. If used, the FGR actuator is usually not set to air influenced.

5. Set the operating mode of the $O_2$ system to “man deact” (manually deactivated). This is necessary for the $O_2$ system curves to be commissioned. The menu path for this parameter is:

   *Params & Display > O2Contr/Alarm > Gas Settings > OptgMode* = **man deact**

6. Set the curve point at which the low fire delay time will be measured. This is typically set to Point 2, unless oversized exhaust stacks with high turndown burners are encountered, which may make gas velocity in the stack too low at low fire. For these applications, setting this parameter to a higher point than Point 2 will increase the gas velocity past the $O_2$ sensor and yield a more responsive $O_2$ reading. This can be set through the following menu path:

   *Params & Display > O2Contr/Alarm> Gas Settings > Control Param > LowfireAdaptPtNo*

7. Set the load value at which the $O_2$ trim will disengage. Typically, this is set to the load value for Point 2 on the Fuel-Air Ratio Control Curve. The exception to this is if parameter ***LowfireAdaptPtNo*** is set to a point other than Point 2. If this is the case, set this for the load value that corresponds to the point set by ***LowfireAdaptPtNo***. This can be set through the following menu path:

   *Params & Display > O2Contr/Alarm > Gas Settings > Control Param > O2 CtrlThreshold*

8. Set the desired type of pre-control. For most natural gas burners where the gap between $O_2$ curves is large enough that the Lambda Factor can be learned (see $O_2$ Control and $O_2$ Alarm Curves in Figure 6-2), this should be set to "like P air". The "like theory" setting is typically used for oil burners, and "LambdaFact1" should only be used as a last resort. The menu path for setting the type of pre-control is:

   *Params & Display > O2Contr/Alarm > Gas Settings > Control Param > Type Air Change*

## Suggested $O_2$ Trim Commissioning - Traditional Nozzle Mixing Burner with No or Low Percentage FGR (Typically LMV52.240)

1. The commissioning procedure assumes the following:
   a. All Pre-Requisites for an LMV52 system with $O_2$ trim (and VSD if equipped) have been met according to Section 4 of this literature.
   b. The Ratio Control Curves have been commissioned according to Section 4 of this literature.
   c. Section 6 of this literature has been read and understood up to this point.

2. As was the case for the Ratio Control Curves in Section 4, the same free spreadsheet can also be used to assist in the commissioning of the $O_2$ trim. This spreadsheet graphically illustrates the $O_2$ curves as well as provides an orderly way to record the details of how the burner was set up.

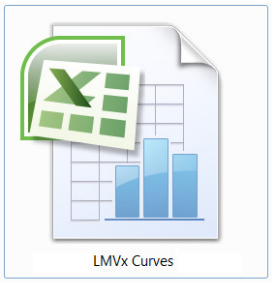


**Figure 6-3: LMVx Curves Spreadsheet**

3. The key to commissioning the $O_2$ curves quickly and easily is contained in the Ratio Control Curves. Specifically, the following must be achieved for each point on the Ratio Control Curves (as paraphrased from Section 4 of this literature):

   a. Safe, efficient combustion as verified by a calibrated stack gas analyzer
   b. The % load matching the fuel flow within +/- 3%
   c. Emissions compliance
   d. Smooth Ratio Control Curves (no sharp peaks or valleys)
   e. VSD speed should increase with load in a linear fashion (if equipped)
   f. Find and record the $\%O_2$ wet corresponding to the fuel rich limit (***O2 Alarm*** value) for each point by probing.*
   g. Find and record the $\%O_2$ wet corresponding to the fuel lean limit (***O2 MaxValue***) for Point 1 and Point 10 by probing.*
   h. Last but not least, leave the curve points so that the $\%O_2$ wet is 2% higher than the fuel rich limit (***O2 Alarm*** value). Record this as the "saved" value for each curve point.

   *** NOTE: When probing the fuel rich limit, it is not recommended to exceed 200 PPM CO (dry basis) or less than 1.0% $O_2$ (wet or dry basis) for any point. When probing the fuel lean limit, it is not recommended to exceed 200 PPM CO or adversely affect flame stability for any point.**

**NOTE: The $\%O_2$ values read and displayed by the LMV52 system are always on a wet basis ($\%O_2$ wet). Most if not all external exhaust gas analyzers read and display $\%O_2$ and other gases on a dry basis ($\%O_2$ dry). All $O_2$ curves must be commissioned using $\%O_2$ wet values as read by the LMV52. The external exhaust gas analyzer is used to read CO, NOx, and also serves as a way to double check the $\%O_2$ wet values. Figure 6-11 gives the approximate relationship between $\%O_2$ wet and $\%O_2$ dry.**

4. Make sure that the QGO20 $O_2$ sensor has been activated for at least 2 hours and is up to temperature. This gives the Zirconium cell time to heat-soak and also to burn off any contaminants. The temperature of the cell can be checked if desired through the following menu path:

   *Params & Display > O2 Module > Process Data > QGO SensorTemp*

5. With the burner off (Phase 12), set the fuel rich limit (***O2 Alarm*** value) for each point. This can be done with the burner off since these values have already been found and recorded during Ratio Control Curve commissioning (see above). Once into the ***O2 Alarm*** curve, simply enter in the recorded value for each point and save each point. To access the ***O2 Alarm*** curve, use the following menu path:

   *Params & Display > O2 Contr/Alarm > Gas Settings > O2 Alarm > O2 Alarm*

6. With the burner off (Phase 12), set the fuel lean limit (***O2 MaxValue***) based on the values that have already been found and recorded for Point 1 and Point 10 during Ratio Control Curve commissioning (see above). To set the fuel lean limit, use the following menu path:

   *Params & Display > O2 Contr/Alarm > Gas Settings > O2 Alarm > O2 MaxValue*

7. If the LMVx Curves spreadsheet is not being used, take the recorded $O_2$ Alarm values and add 0.5% for each point. Take the "saved" $\%O_2$ from the Ratio Control Curve and subtract 1.0% for each point. This will provide a target band for setting the $O_2$ Control Curve points. Example: The $O_2$ Alarm value is 2%. The Ratio Control Curve point "saved" is 4%. Add 0.5% to the $O_2$ Alarm = 2.5%. Subtract 1% from the Ratio Control = 3%. For this point, the target for the $O_2$ Control is between 2.5% and 3%.

8. When it is safe to do so and when there is adequate load available, start the burner / boiler and let it warm up to operating temperature.

9. Access the $O_2$ Ratio Control Curve and the $O_2$ Control Curve using the following menu path:

   *Params & Display > O2 Contr/Alarm > Gas Settings > O2 Control*

10. Once the $O_2$ Control Curve is entered, Point 2 should be displayed. Pressing Enter again should drive the burner to Point 2 if it is not already there. When the burner is driving to Point 2, a carat (>) will be displayed. Once the burner is at Point 2, a colon (:) will be displayed. If the aux 3 actuator is used for FGR and ***FGR-Mode*** is not set for “Aux3onCurve”, a pound (#) indicates the aux 3 actuator has not released to the curve.

11. The AZL52 will then prompt "when value stable, continue with ENTER". After the burner is at Point 2, wait at least an additional 30 seconds to make sure that the $O_2$ value being read is representative of Point 2, then press Enter. Pressing Enter stores the $O_2$ Ratio Control Curve point. The value that is stored should be close (+/- 0.2%) to the "saved" value that was recorded for Point 2 during Ratio Control Curve commissioning.

    **NOTE: It is important to wait long enough to get a steady-state $O_2$ value before Enter is pressed. If in doubt, wait longer for the value to stabilize. Waiting longer than necessary has no ill effects for the $O_2$ trim commissioning.**

    **NOTE: If the $O_2$ value displayed on the AZL52 is not steady (oscillating more than +/- 0.1% $O_2$), it is likely that the $O_2$ sensor is not mounted correctly, or there are other issues with the burner / boiler that are affecting the fuel / air ratio. These issues must be corrected before proceeding.**

12. Next, slowly increase the StandardVal number, which reduces the air flow into the burner. The reading beside O2 Control should start to drop as StandardVal is increased. Note that the Tau time of the boiler comes into play here, so it may take 10-15 seconds or more for a change in the StandardVal number to be seen in the $O_2$ reading.

13. Once the StandardVal number has been increased enough to get the %$O_2$ into the target band (at least 0.5% $O_2$ above the $O_2$ Alarm and 1% below the $O_2$ Ratio Control Curve point), the point can be stored. This is done by pressing Enter, Escape, and then Enter again.

14. After the point is stored, the delay time at Point 2 (***Tau Low-Fire***) will be measured. This should occur and the AZL52 should state "Measurement Successful, Control Parameters Stored".

15. The rest of the Points (3 thru 10) can now be done in a similar manner. The delay time (***Tau High-Fire***) will also be measured at the high fire point, in this case Point 10.

16. After the delay time is successfully measured at Point 10, escape out of the $O_2$ Control Curve. See Figures 6-4 and 6-5 below for an example of what typical $O_2$ trim curves and Lambda Factor curves might look like for this application.

17. The $O_2$ trim can now be activated in one of two modes. Mode "conAutoDeac" allows the $O_2$ trim to work as long as the measured %$O_2$ does not exceed the rich limit (***$O_2$ Alarm***) or the lean limit (***$O_2$ MaxValue).*** If either of these limits is exceeded, the $O_2$ trim will deactivate and the burner will run on the normal Ratio Control Curves. Mode "O2 Control" also allows the $O_2$ trim to work, except that if the limits are exceeded a lockout will occur. Mode "conAutoDeac" is typically used. To set the $O_2$ control operating mode, use the following menu path:

    *Params & Display > O2Contr/Alarm > Gas Settings > OptgMode*

18. The $O_2$ trim is now commissioned and activated. Some additional tuning may be required depending on the application. See "Post Commissioning Tuning" later in this section for more information.

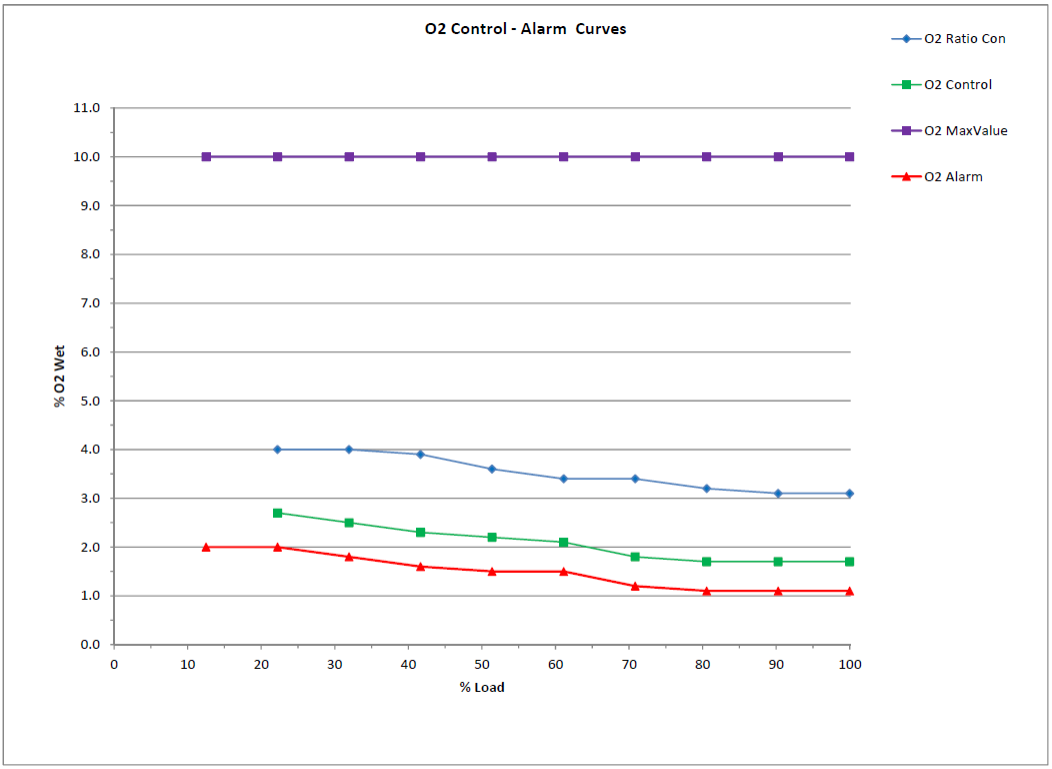


| %O2 Control - Alarm Curves | | | | | | | | | | | | | | | | | |
|---|---|---|---|---|---|---|---|---|---|---|---|---|---|---|---|---|---|
| From Above | | | Based on O2 Alarm Rich and O2 Ratio | | Based on burner capabilities | | As saved in the LMV52 | | | Emissions Data from Exhaust Gas Analyzer @ O2 Ratio Control | | | Emissions Data from Exhaust Gas Analyzer @ O2 Control | | |
| CURVE POINTS (O2 Control-Alarm) | LMV Curve Point | LMV Load at Curve Point | Target for O2 Control | | O2 Alarm (Rich Limit)* | O2 MaxValue (Lean Limit) | O2 Ratio Control | O2 Control | Standard Val | O2 (Dry) | CO | Nox | O2 (Dry) | CO | Nox |
| | # | % | % O2 Wet | | % O2 Wet | | % O2 Wet | | % | % | PPM | PPM | % | PPM | PPM |
| | 1 | 12.5 | MAX | MIN | 2.0 | 10.0 | Cannot trim on Point 1 | | | Cannot trim on Point 1 | | | Cannot trim on Point 1 | | |
| | 2 | 22.2 | 3.0 | 2.5 | 2.0 | 10.0 | 4.0 | 2.7 | 6.0 | 5.0 | 1.0 | 34.0 | 3.7 | 1.0 | 38.0 |
| | 3 | 31.9 | 2.8 | 2.3 | 1.8 | 10.0 | 4.0 | 2.5 | 6.2 | 5.0 | 1.0 | 33.0 | 3.5 | 1.0 | 37.0 |
| | 4 | 41.7 | 2.6 | 2.1 | 1.6 | 10.0 | 3.9 | 2.3 | 6.0 | 4.9 | 0.0 | 32.0 | 3.3 | 0.0 | 36.0 |
| | 5 | 51.4 | 2.5 | 2.0 | 1.5 | 10.0 | 3.6 | 2.2 | 6.5 | 4.6 | 0.0 | 34.0 | 3.2 | 0.0 | 38.0 |
| | 6 | 61.1 | 2.5 | 2.0 | 1.5 | 10.0 | 3.4 | 2.1 | 6.0 | 4.4 | 0.0 | 35.0 | 3.1 | 0.0 | 39.0 |
| | 7 | 70.8 | 2.2 | 1.7 | 1.2 | 10.0 | 3.4 | 1.8 | 6.1 | 4.4 | 2.0 | 35.0 | 2.8 | 2.0 | 39.0 |
| | 8 | 80.6 | 2.1 | 1.6 | 1.1 | 10.0 | 3.2 | 1.7 | 6.3 | 4.2 | 2.0 | 37.0 | 2.7 | 2.0 | 41.0 |
| | 9 | 90.3 | 2.1 | 1.6 | 1.1 | 10.0 | 3.1 | 1.7 | 6.3 | 4.1 | 1.0 | 38.0 | 2.7 | 1.0 | 42.0 |
| | 10 | 100.0 | 2.1 | 1.6 | 1.1 | 10.0 | 3.1 | 1.7 | 6.2 | 4.1 | 1.0 | 39.0 | 2.7 | 1.0 | 43.0 |

**Figure 6-4: Example of Typical $O_2$ Control Curves - Nozzle Mixing Burner (No or Low % FGR)**

The curves above illustrate traits that are common to most nozzle mixing burners. These are:

- Wide stability band - 8% $O_2$ or more between the rich and lean limits
- Curves decrease in $\%O_2$ from low fire to high fire
- 1% $O_2$ or more between the $O_2$ Ratio Control Curve and the $O_2$ Control Curve (accurate Lambda Factor)
- $O_2$ Control Curve close to rich limit (minimize $\%O_2$ to maximize burner efficiency)
- Curves are set up for efficiency (NOx emissions are not a priority)
- LMV52.240 $O_2$ trim system adequate for this type of setup

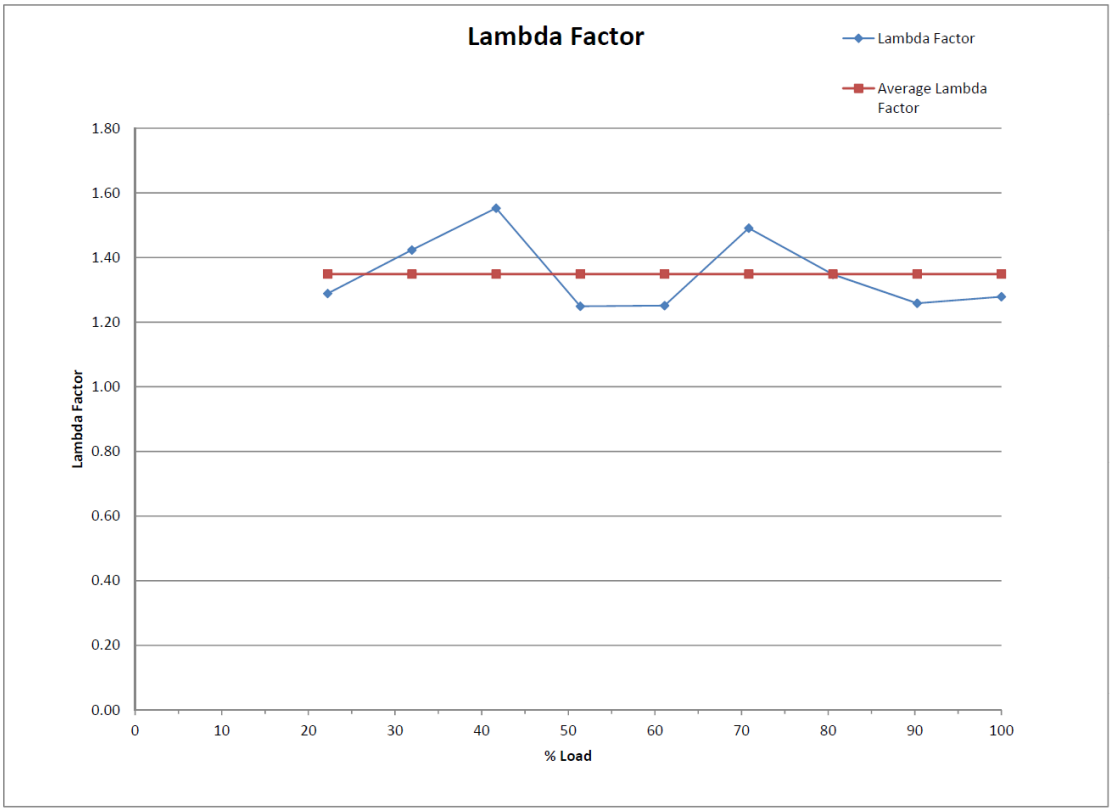


| LMV52 Load | Lambda Ratio control Curve | Lambda O2 control curve | Lambda Factor | Average Lambdafactor | Standard Dev |
|---|---|---|---|---|---|
| 22.2 | 1.26 | 1.16 | 1.29 | 1.35 | 0.11373 |
| 31.9 | 1.26 | 1.15 | 1.42 | 1.35 | |
| 41.7 | 1.25 | 1.14 | 1.55 | 1.35 | |
| 51.4 | 1.23 | 1.13 | 1.25 | 1.35 | |
| 61.1 | 1.21 | 1.12 | 1.25 | 1.35 | |
| 70.8 | 1.21 | 1.10 | 1.49 | 1.35 | |
| 80.6 | 1.20 | 1.10 | 1.35 | 1.35 | |
| 90.3 | 1.19 | 1.10 | 1.26 | 1.35 | |
| 100.0 | 1.19 | 1.10 | 1.28 | 1.35 | |

**Figure 6-5: Example of Typical Lambda Factors for $O_2$ Control Curves in Figure 6-4 (above)**

The Lambda Factor curves serve as a tool to evaluate how accurate and repeatable the fundamental mechanical systems of the burner are and how well all the curves were commissioned. In general, the Lambda Factor curve should be as constant or "flat" as possible. The actual numerical value is not important, but the consistency between points is. An approximate guide for evaluation of the Lambda Factor:

- Difference in Lambda Factor between adjacent points -> lower numbers are better. Max = 0.35 (Higher numbers may lead to $O_2$ trim deactivations on some burners during modulation).
- Standard Deviation of all points on the curve -> lower numbers are better. Max = 0.30 (Higher numbers may lead to $O_2$ trim deactivations on some burners during modulation).

## Suggested $O_2$ Trim Commissioning - Premix Mesh Burner or Nozzle Mixing Burner with High Percentage of FGR (Typically LMV52.440)

1. The commissioning procedure assumes the following:
   a. All Pre-Requisites for an LMV52 system with $O_2$ trim (and VSD if equipped) have been met according to Section 4 of this literature.
   b. The Ratio Control Curves have been commissioned according to Section 4 of this literature.
   c. Section 6 of this literature has been read and understood up to this point.
   d. If a start mode with combustion air temperature compensation will be used, the air temperature sensor must be installed and activated.

2. As was the case for the Ratio Control Curves in Section 4, the same free spreadsheet can also be used to assist in the commissioning of the $O_2$ trim. This spreadsheet graphically illustrates the $O_2$ curves as well as provides an orderly way to record the details of how the burner was set up.

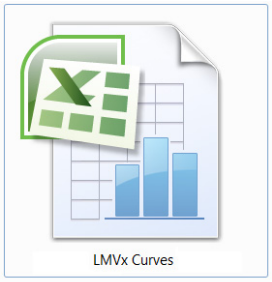


**Figure 6-3: LMVx Curves Spreadsheet**

3. The key to commissioning the $O_2$ curves quickly and easily is contained in the Ratio Control Curves. Specifically, the following must be achieved for each point on the Ratio Control Curves (as paraphrased from Section 4 of this literature):

   a. Safe combustion as verified by a calibrated stack gas analyzer
   b. The % load matching the fuel flow within +/- 3%
   c. Emissions compliance
   d. Smooth Ratio Control Curves (no sharp peaks or valleys)
   e. VSD speed should increase with load in a linear fashion (if equipped)
   f. Determine the $\%O_2$ wet corresponding to the fuel rich limit ($O_2$ Alarm value) for each point. Probing may or may not be possible depending on the burner design. Also, follow burner OEM recommendations. Most mesh burner elements can be damaged if run too fuel rich.*
   g. Find and record the $\%O_2$ wet corresponding to the fuel lean limit (***O2 MaxValue***) for Point 1 and Point 10 by probing or according to burner OEM recommendations.*
   h. Find the target $\%O_2$. For these burners the target $\%O_2$ for each point will be the $\%O_2$ wet corresponding to emissions compliance (typically CO, NOx). After the target $\%O_2$ is found, increase the $\%O_2$ and leave the point at least 0.5% $O_2$ leaner than the target $\%O_2$. Record this as the "saved" value for each curve point.

*** NOTE: When probing the fuel rich limit, it is not recommended to exceed 200 PPM CO (dry basis) or less than 1.0% $O_2$ (wet or dry basis) for any point. When probing the fuel lean limit, it is not recommended to exceed 200 PPM CO or adversely affect flame stability for any point.**

**NOTE: The $\%O_2$ values read and displayed by the LMV52 system are always on a wet basis ($\%O_2$ wet). Most if not all external exhaust gas analyzers read and display $\%O_2$ and other gases on a dry basis ($\%O_2$ dry). All $O_2$ curves must be commissioned using $\%O_2$ wet values as read by the LMV52. The external exhaust gas analyzer is used to read CO, NOx, and also serves as a way to double check the $\%O_2$ wet values. Figure 6-11 gives the approximate relationship between $\%O_2$ wet and $\%O_2$ dry.**

4. Make sure that the QGO20 $O_2$ sensor has been activated for at least 2 hours and is up to temperature. This gives the Zirconium cell time to heat-soak and also to burn off any contaminants. The temperature of the cell can be checked if desired through the following menu path:

   *Params & Display > O2 Module > Process Data > QGO SensorTemp*

5. With the burner off (Phase 12), set the fuel rich limit (***O2 Alarm*** value) for each point. This can be done with the burner off since these values have already been found and recorded during Ratio Control Curve commissioning (see above). Once into the ***O2 Alarm*** curve, simply enter in the recorded value for each point and save each point. To access the ***O2 Alarm*** curve, use the following menu path:

   *Params & Display > O2 Contr/Alarm > Gas Settings > O2 Alarm > O2 Alarm*

6. With the burner off (Phase 12), set the fuel lean limit (***O2 MaxValue***) based on the values that have already been found and recorded for Point 1 and Point 10 during Ratio Control Curve commissioning (see above). To set the fuel lean limit, use the following menu path:

   *Params & Display > O2 Contr/Alarm > Gas Settings > O2 Alarm > O2 MaxValue*

7. The target $\%O_2$ (recorded above) will be used for the $O_2$ Control Curve. The $O_2$ Control Curve points should be set to the target $\%O_2$ within a band of (+0.2 / -0.0).

8. When it is safe to do so and when there is adequate load available, start the burner / boiler and let it warm up to operating temperature.

9. Access the $O_2$ Ratio Control Curve and the $O_2$ Control Curve using the following menu path:

   *Params & Display > O2 Contr/Alarm > Gas Settings > O2 Control*

10. Once the $O_2$ Control Curve is entered, Point 2 should be displayed. Pressing Enter again should drive the burner to Point 2 if it is not already there. When the burner is driving to Point 2, a carat (>) will be displayed. Once the burner is at Point 2, a colon (:) will be displayed. If the aux 3 actuator is used for FGR and ***FGR-Mode*** is not set for "Aux3onCurve", a pound (#) indicates the aux 3 actuator has not released to the curve.

11. The AZL52 will then prompt "when value stable, continue with ENTER". After the burner is at Point 2, wait at least an additional 30 seconds to make sure that the $O_2$ value being read is representative of Point 2, then press Enter. Pressing Enter stores the $O_2$ Ratio Control Curve point. The value that is stored should be close (+/- 0.2%) to the "saved" value that was recorded for Point 2 during Ratio Control Curve commissioning.

    **NOTE: It is important to wait long enough to get a steady-state $O_2$ value before Enter is pressed. If in doubt, wait longer for the value to stabilize. Waiting longer than necessary has no ill effects for the $O_2$ trim commissioning.**

    **NOTE: If the $O_2$ value displayed on the AZL52 is not steady (oscillating more than +/- 0.1% $O_2$), it is likely that the $O_2$ sensor is not mounted correctly, or there are other issues with the burner / boiler that are affecting the fuel / air ratio. These issues must be corrected before proceeding.**

12. Next, slowly increase the StandardVal number, which reduces the air flow into the burner. The reading beside O2 Control should start to drop as StandardVal is increased. Note that the Tau time of the boiler comes into play here, so it may take 10-15 seconds or more for a change in the StandardVal number to be seen in the $O_2$ reading.

13. Once the StandardVal number has been increased enough to get the $\%O_2$ at least 0.5% below the $O_2$ Ratio Control Curve, the point can be stored. This is done by pressing Enter, Escape, and then Enter again.

    **NOTE: If the Ratio Control Curve point was saved 0.5% $O_2$ above the target $\%O_2$ (see step 3 above), then lowering the $\%O_2$ by 0.5% using the StandardVal should put the $O_2$ Control Curve point on or very close to the target $\%O_2$.**

14. After the point is stored, the delay time at Point 2 (***Tau Low-Fire***) will be measured. This should occur and the AZL52 should state "Measurement Successful, Control Parameters Stored".

15. The rest of the Points (3 thru 10) can now be done in a similar manner. The delay time (***Tau High-Fire***) will also be measured at the high fire point, in this case Point 10.

16. After the delay time is successfully measured at Point 10, escape out of the $O_2$ control curve. See Figures 6-6 and 6-7 below for an example of what typical $O_2$ trim curves and Lambda Factor curves might look like for this application.

17. If the burner must always be run with either temperature compensation or $O_2$ trim (most ultra-low NOx mesh burners):

    a. Limit the low fire to the load number at Point 2. This can be done by setting parameter ***MinLoadGas*** to the load number of Point 2 using the following menu path:

    *Params & Display > RatioControl > Gas Settings > LoadLimits > MinLoadGas*

b. Make the burner drive to Point 2 immediately after light off. This can be done by setting parameter ***StartPointOp*** to 2 using the following menu path:

*Params & Display > RatioControl > Gas Settings > StartPointOp* = **2**

18. If the burner needs air temperature compensation after light off (most ultra-low NOx mesh burners), activate air temperature compensation. Multiple modes of temperature compensation are available; the most often used mode is "IgnPtWithTC". This mode will enable temperature compensation after light off and at Point 2 before the $O_2$ trim engages. Temperature compensated light off can be activated using the following menu path:

*Params & Display > O2Contr/Alarm > Gas Settings > Startmode > Startmode*

**NOTE: Air temperature compensation requires an air temperature sensor wired to the LMV52.440. See "$O_2$ Trim Configuration (Parameterization) Before Commissioning" above for more information.**

19. The $O_2$ trim can now be activated in one of two modes. Mode "conAutoDeac" allows the $O_2$ trim to work as long as the measured %$O_2$ does not exceed the rich limit (***$O_2$ Alarm***) or the lean limit (***$O_2$ MaxValue).*** If either of these limits is exceeded, the $O_2$ trim will deactivate and the burner will run on the normal Ratio Control Curves. Mode "O2 Control" also allows the $O_2$ trim to work, except that if the limits are exceeded a lockout will occur. Mode "conAutoDeac" is typically used. To set the $O_2$ control operating mode, use the following menu path:

*Params & Display > O2Contr/Alarm > Gas Settings > OptgMode*

20. The $O_2$ trim is now commissioned and activated. Some additional tuning may be required depending on the application. See "Post Commissioning Tuning" later in this section for more information.

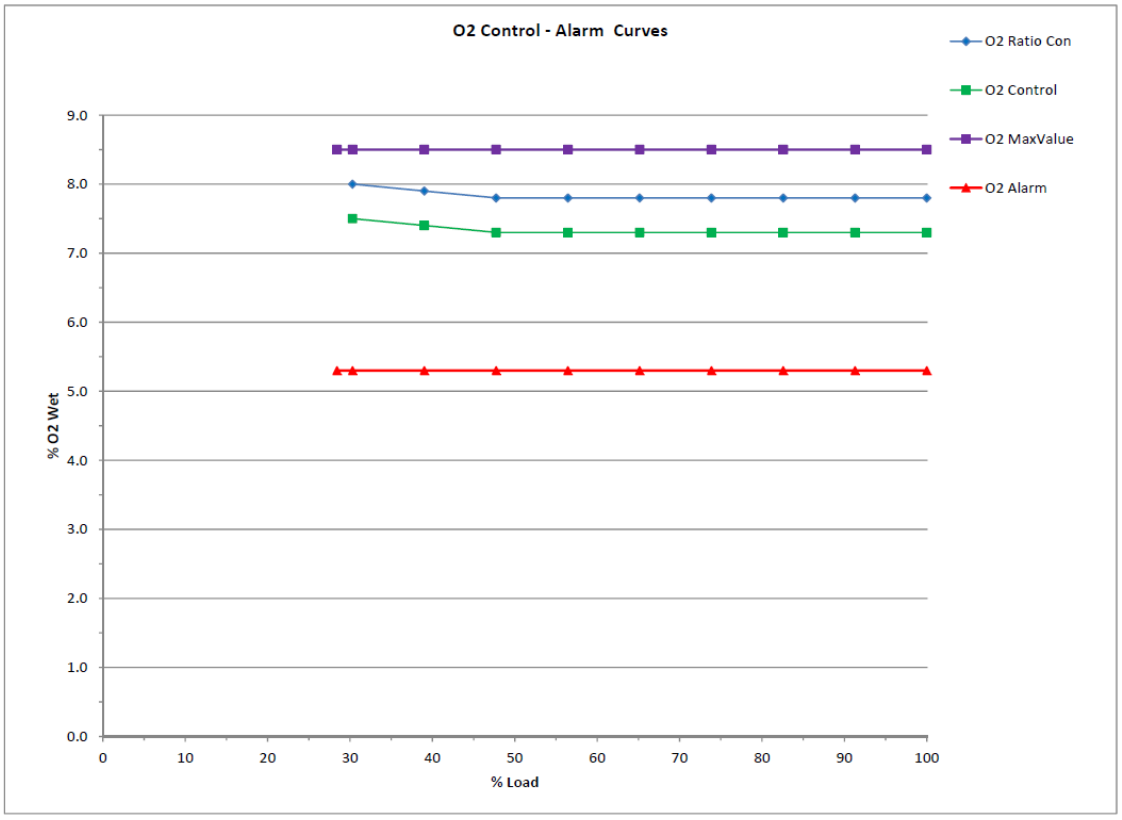


| %O2 Control - Alarm Curves | | | | | | | | | | | | | | | | |
|---|---|---|---|---|---|---|---|---|---|---|---|---|---|---|---|---|
| | From Above | | Based on burner capabilities | | | As saved in the LMV52 | | | Emissions Data from Exhaust Gas Analyzer @ O2 Ratio Control | | | Emissions Data from Exhaust Gas Analyzer @ O2 Control | | |
| CURVE POINTS (%O2 Control - Alarm) | LMV Curve Point | LMV Load at Curve Point | Target for O2 Control | O2 Alarm (Rich Limit) | O2 MaxValue (Lean Limit) | O2 Ratio Control | O2 Control | Standard Val | O2 (Dry) | CO | Nox | O2 (Dry) | CO | Nox |
| | # | % | % O2 Wet | | | % O2 Wet | | % | % | PPM | PPM | % | PPM | PPM |
| | 1 | 28.4 | X | 5.3 | 8.5 | Cannot trim on Point 1 | | | Cannot trim on Point 1 | | | Cannot trim on Point 1 | | |
| | 2 | 30.3 | 7.5 | 5.3 | 8.5 | 8.0 | 7.5 | 3.0 | 9.0 | 2.0 | 4.0 | 8.5 | 1.0 | 5.0 |
| | 3 | 39.0 | 7.4 | 5.3 | 8.5 | 7.9 | 7.4 | 3.0 | 8.9 | 1.0 | 5.0 | 8.4 | 0.0 | 6.0 |
| | 4 | 47.7 | 7.3 | 5.3 | 8.5 | 7.8 | 7.3 | 2.9 | 8.8 | 0.0 | 4.0 | 8.3 | 0.0 | 5.0 |
| | 5 | 56.4 | 7.3 | 5.3 | 8.5 | 7.8 | 7.3 | 2.8 | 8.8 | 3.0 | 3.0 | 8.3 | 0.0 | 5.0 |
| | 6 | 65.2 | 7.3 | 5.3 | 8.5 | 7.8 | 7.3 | 2.4 | 8.8 | 0.0 | 4.0 | 8.3 | 1.0 | 5.0 |
| | 7 | 73.9 | 7.3 | 5.3 | 8.5 | 7.8 | 7.3 | 2.3 | 8.8 | 0.0 | 4.0 | 8.3 | 2.0 | 5.0 |
| | 8 | 82.6 | 7.3 | 5.3 | 8.5 | 7.8 | 7.3 | 2.4 | 8.8 | 0.0 | 4.0 | 8.3 | 3.0 | 5.0 |
| | 9 | 91.3 | 7.3 | 5.3 | 8.5 | 7.8 | 7.3 | 2.3 | 8.8 | 1.0 | 5.0 | 8.3 | 5.0 | 6.0 |
| | 10 | 100.0 | 7.3 | 5.3 | 8.5 | 7.8 | 7.3 | 2.5 | 8.8 | 1.0 | 4.0 | 8.3 | 10.0 | 6.0 |

**Figure 6-6: Example of Typical $O_2$ Control Curves - Mesh Burner or Nozzle Mix with High % FGR**

The curves above illustrate traits that are common to most mesh burners. These are:

- Narrow stability band - typically 3.5% or less
- Curves are flat or nearly flat from low fire to high fire
- 0.5% $O_2$ between the $O_2$ Ratio Control Curve and the $O_2$ Control Curve - minimum to learn Lambda Factor
- $O_2$ Control Curve close to lean limit - high $\%O_2$ to cool combustion
- Curves are set up for low NOx - efficiency is lower due to high $\%O_2$
- LMV52.440 $O_2$ trim systems are typically required for this type of setup

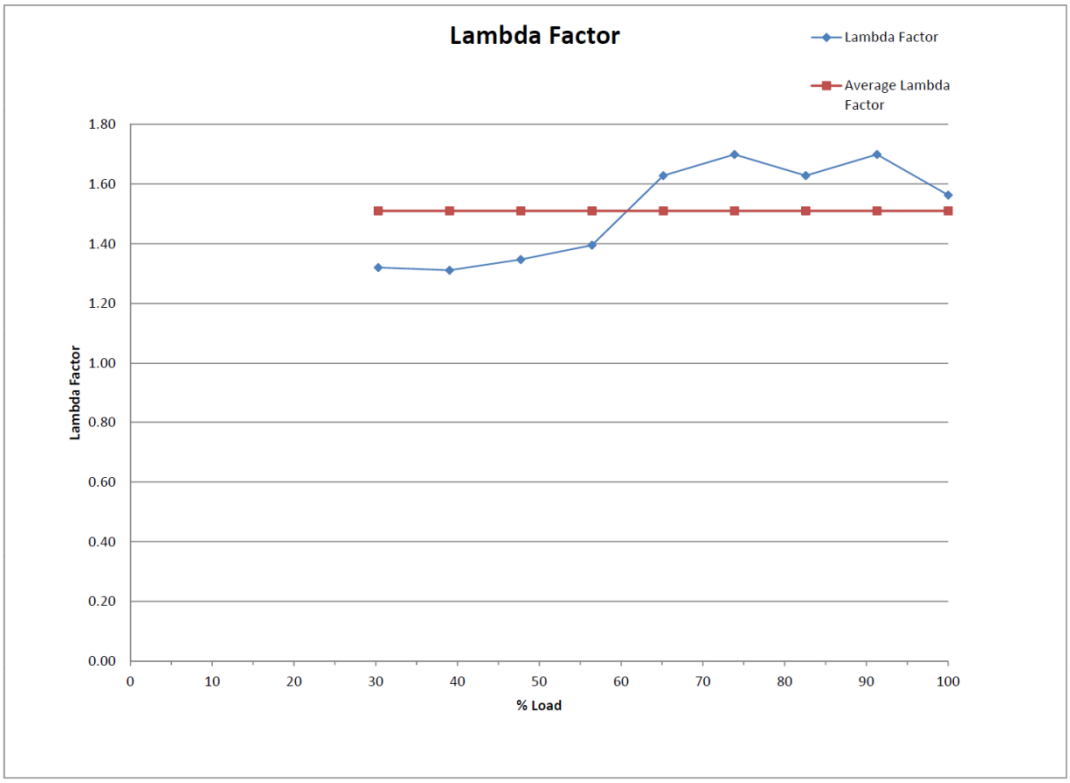


| LMV52 Load | Lambda Ratio control | Lambda O2 control curve | Lambda Factor | Average Lambda Factor | Standard Dev |
|---|---|---|---|---|---|
| 30.3 | 1.68 | 1.62 | 1.32 | 1.51 | 0.1646359 |
| 39.0 | 1.67 | 1.61 | 1.31 | 1.51 | |
| 47.7 | 1.66 | 1.59 | 1.35 | 1.51 | |
| 56.4 | 1.66 | 1.59 | 1.40 | 1.51 | |
| 65.2 | 1.66 | 1.59 | 1.63 | 1.51 | |
| 73.9 | 1.66 | 1.59 | 1.70 | 1.51 | |
| 82.6 | 1.66 | 1.59 | 1.63 | 1.51 | |
| 91.3 | 1.66 | 1.59 | 1.70 | 1.51 | |
| 100.0 | 1.66 | 1.59 | 1.56 | 1.51 | |

**Figure 6-7: Example of Typical Lambda Factor for $O_2$ Control Curves in Figure 6-6 (above)**

The Lambda Factor curves serve as a tool to evaluate how accurate and repeatable the fundamental mechanical systems of the burner are and how well all the curves were commissioned. In general, the Lambda Factor curve should be as constant or "flat" as possible. The actual numerical value is not important, but the consistency between points is. An approximate guide for evaluation of the Lambda Factor:

- Difference in Lambda Factor between adjacent points -> lower numbers are better. Max = 0.45 (Higher numbers may lead to $O_2$ trim deactivations on some burners during modulation).
- Standard Deviation of all points on the curve -> lower numbers are better. Max = 0.40 (Higher numbers may lead to $O_2$ trim deactivations on some burners during modulation).

## Post Commissioning Tuning

After the $O_2$ curves have been set up according to the procedures above, some additional burner / boiler specific tuning may be necessary to keep the $O_2$ trim operating properly. When and how to use these tuning parameters is discussed below.

***LoadCtrlSuspend*** **-** This sets the load change that is necessary to make the $O_2$ trim transition from active $O_2$ trim to pre-control. Many factors influence the setting of this parameter.
Menu path: *Params & Display > O2Contr/Alarm > Gas Settings > Control Param*

Higher settings (more active trim, less pre-control) can help the $O_2$ trim stay close to setpoint in the following situations:

1. The $O_2$ Control Curve is relatively flat from low fire to high fire (varies less than 0.5% $O_2$)
2. The modulation ramp time is slow (***OperatRampMod*** is set to 60 seconds or more)
3. The delay time (Tau time) of the boiler is relatively fast (***Tau Low-Fire*** is set to 7 seconds or less)

Lower settings (less active trim, more pre-control) can help the $O_2$ trim stay close to setpoint in the following situations:

1. The $O_2$ Control Curve slopes from low fire to high fire (varies more than 0.5% $O_2$)
2. The modulation ramp time is fast (***OperatRampMod*** is set to 30 seconds)
3. The delay time (Tau time) of the boiler is slow (***Tau Low-Fire*** is set for more than 7 seconds)

***O2TrimBehavior*** **-** If parameter ***Startmode*** is set to "standard", this setting controls how the $O_2$ trim responds if the measured $O_2$ value starts to move away from the $O_2$ setpoint significantly.
Menu path: *Params & Display > O2Contr/Alarm > Gas Settings > Control Param*

1. A setting of "ForcedAirAdd" will help if deactivations are due to the rich limit ($O_2$ alarm) since air will be added more aggressively.
2. A setting of "ForcedAirRed" will help if deactivations are due to the lean limit (***O2 MaxValue***) since air will be subtracted more aggressively.
3. A setting of "symmetric" is used when the rich limit ($O_2$ alarm) and the lean limit (***O2 MaxValue***) are relatively close together, and an aggressive correction in one direction might cause a deactivation due to the other limit.

**NOTE: On an LMV52.440 with the *StartMode* set to something other than "standard", the setting of *O2TrimBehavior* has no effect.**

***O2ModOffset*** **-** During a load change when the pre-control becomes active (see ***LoadCtrlSuspend***), this will temporarily add more air beyond what is prescribed by the Lambda Factor. Increasing this setting can help with rich limit ($O_2$ alarm) deactivations during modulation, but this parameter should not be used as a substitute for proper $O_2$ trim commissioning procedures.
Menu path: *Params & Display > O2Contr/Alarm > Gas Settings > Control Param*

***O2MaxManVariable* and *O2MinManVariable*** – These parameters set how much the $O_2$ system can trim in an attempt to achieve the $O_2$ setpoint - essentially the trim limits for the $O_2$ system.
***O2MaxManVariable*** sets how much the system can increase the air rate. Likewise, ***O2MinManVariable*** sets how much the system can decrease the air rate.
Menu path: *Params & Display > O2Contr/Alarm > Gas Settings > Control Param*

These trim limits must be set so that the $O_2$ system can achieve the $O_2$ setpoint. However, the limits should not be set in a way that allows the burner to run at an unsafe fuel-air ratio.

Ideally, the $O_2$ trim system must compensate for two main environmental conditions. These conditions are ambient air temperature and barometric pressure. Figure 6-8 illustrates how much the manipulated variable needs to change to compensate for these environmental conditions. The chart in Figure 6-8 and the example in Figure 6-9 serve as a guideline for setting the ***O2MaxManVariable*** and ***O2MinManVariable*** parameters.

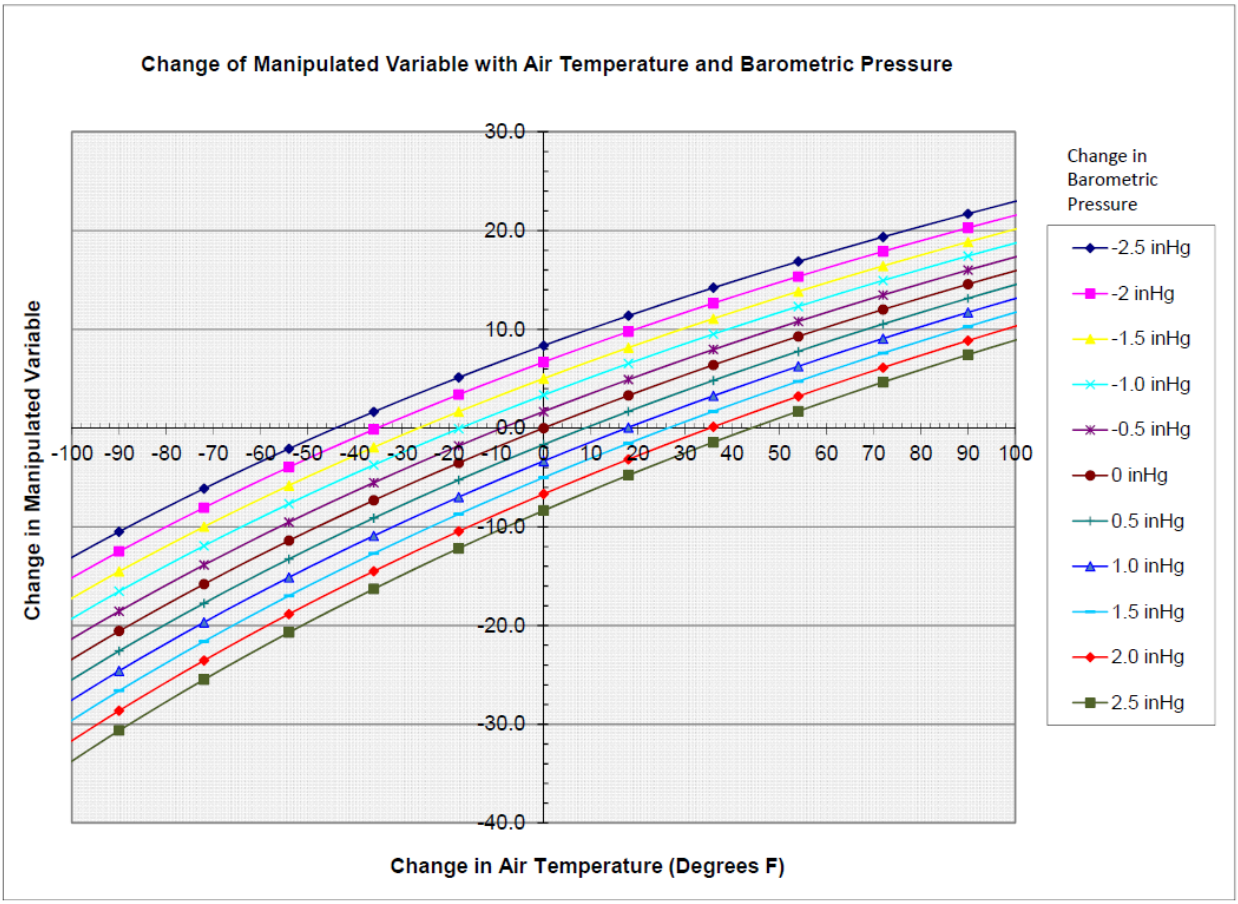


**Figure 6-8: Theoretical Change of the Manipulated Variable with Changes in Ambient Temperature and Pressure**

When the $O_2$ Control Curve is commissioned, all burners will be at (0, 0) on the chart, where the X-axis and Y-axis cross. As air temperature and barometric pressure change from the air temperature and

barometric pressure that existed during $O_2$ Control Curve commissioning, the manipulated variable must change to keep the same $\%O_2$ in the stack. An example is done below and illustrated in Figure 6-9:

Air temperature during $O_2$ Control Curve commissioning = 80°F
Barometric pressure during $O_2$ Control Curve commissioning = 30.0 inHg

Maximum expected air temperature = 120°F (+40°F compared to commissioning)
Minimum expected air temperature = 30°F (-50°F compared to commissioning)
Maximum expected barometric pressure = 31.5 inHg (+1.5 inHg compared to commissioning)
Minimum expected barometric pressure = 28.0 inHg (-2.0 inHg compared to commissioning)

Using Figure 6-8 and the information above, the following values can be found:

***O2MaxManVariable*** = 13
***O2MinManVariable*** = -16

Since other small factors exist that can change (heating value of the fuel, change in draft, etc.), it is suggested that an additional 5% are added to the max and subtracted from the min, giving the following settings:

***O2MaxManVariable*** = 18
***O2MinManVariable*** = -21

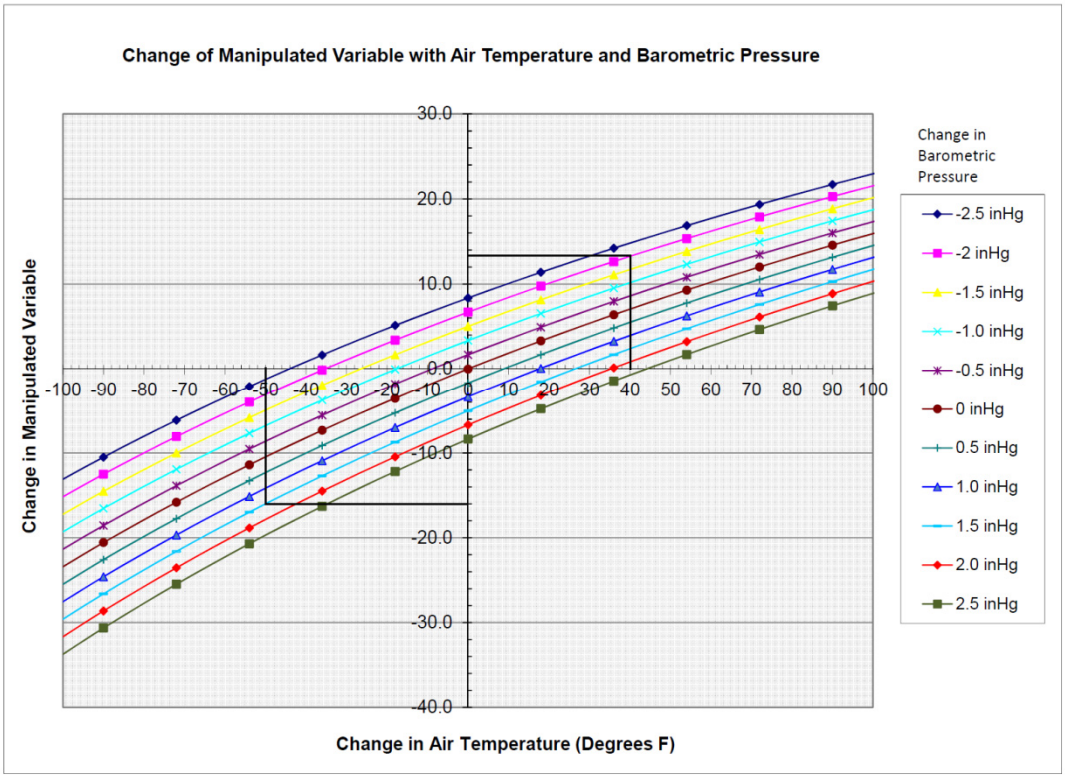


**Figure 6-9: Finding the Theoretical Max and Min Manipulated Variable for Given Conditions**

***NumberTauSuspend* -** The length of time after main flame light-off that is required until an accurate, representative $O_2$ value is read by the $O_2$ sensor. Basically, the time it takes to replace all of the air in the boiler with products of combustion. This parameter is a multiplier that is taken times the delay time at low fire (***Tau Low-Fire***) to determine the length of waiting time before a representative $O_2$ value is measured and the $O_2$ trim can engage.

If ***Tau Low-Fire*** was read to be 5 seconds during $O_2$ Control Curve commissioning, and ***NumberTauSuspend*** is set to 10, then the $O_2$ trim would engage 50 seconds after main flame light-off.

A setting of 10 will work for almost all applications, and will be conservative for most. Higher numbers (more waiting time) are more conservative and lower numbers are less conservative.
Menu path: *Params & Display > O2Contr/Alarm > Gas Settings > Startmode*

***Startmode* -** This determines how the burner transitions from light-off to engaging the $O_2$ trim. Two of the modes, "Ign Load TC" and "IgnPtWithTC", require a combustion air temperature sensor.

Immediately after main flame light-off, the $O_2$ sensor does not have a valid reading since the gas path of the boiler is full of air. Some burner designs, most notably ultra-low NOx mesh burners, require some type of compensation at light-off to ensure flame stability before the $O_2$ sensor has a valid reading. Four options are available:

1. **Standard** - Burner will modulate right after light-off, not waiting for the $O_2$ trim to engage. $O_2$ trim will engage after the time defined by ***NumberTauSuspend*** expires at the burner's current load.
2. **Ign Load TC** - This **will** vary the ignition positions (special positions) of the actuators based on the combustion air temperature and also based on a defined load number (parameter ***Load of Ignition***). This also will drive the "temperature compensated" actuators to Point 2 (or whichever point is defined by parameter ***StartPointOp***). The burner will be held in Phase 60 at Point 2 (or whichever point is defined by parameter ***StartPointOp***) until the time defined by ***NumberTauSuspend*** expires. The burner will then be released to modulate with the $O_2$ trim active.
3. **IgnPtWithTC** - This **will not** vary the ignition positions (special positions) of the actuators based on the combustion air temperature. It will drive the actuators from the temperature-compensated set ignition positions to Point 2 (or whichever point is defined by parameter ***StartPointOp***). The burner will be held in Phase 60 at Point 2 (or whichever point is defined by parameter ***StartPointOp***) until the time defined by ***NumberTauSuspend*** expires. The burner will then be released to modulate with the $O_2$ trim active.
4. **IgnPtWoutTC** - Similar to "IgnPtWithTC", but less accuracy due to the lack of a combustion air sensor.

On burners with a wide flame stability band, such as traditional nozzle mixing burners with little or no FGR, a ***StartMode*** setting of "standard" typically works well. On burners with a more narrow flame stability band (low and ultra-low NOx mesh burners), "IgnPtWithTC" typically works well.
Menu path: *Params & Display > O2Contr/Alarm > Gas Settings > Startmode*

***O2InitOffset* -** For the other three start modes other than "standard", this is a rich or lean bias that is applied to the temperature compensation. Negative values (-2 to -0.1) will bias the temperature compensation more rich, and positive values (0.1 to 2) will bias the temperature compensation more lean. Note that the units on this are $\%O_2$, so a setting of -2 will offset the $O_2$ approximately 2% more rich. This offset is dissolved after the $O_2$ trim becomes active (***NumberTauSuspend*** expires).
Menu path: *Params & Display > O2Contr/Alarm > Gas Settings > Startmode*

## Observing the Behavior of the $O_2$ Trim

After the $O_2$ curves are commissioned and post commissioning tuning is done, the behavior of the $O_2$ trim can be observed and evaluated to determine if further tuning is necessary.

***Current O2 Value*** and ***O2 Setpoint***
Menu path: *Operation > O2 Module*

Parameters can be toggled between to see how well the $O_2$ setpoint is being followed at different firing rates and when transitioning between firing rates.

Expected behavior: the difference between the $O_2$ setpoint and actual value should be slightly more when the burner is transitioning between firing rates and less when not transitioning. As a guideline, the difference should be less than +/- 0.2% $O_2$ when not transitioning and less than +/-0.4% $O_2$ when transitioning.

***ManVar O2 Ctrl***
Menu path: *Params & Display > O2 Contr/Alarm > Process Data*

This parameter shows the amount of trim. The value shown is defined below:
1. A value of 50% indicates no trimming.
2. Values greater than 50% - more air is needed to achieve $O_2$ setpoint compared to when the $O_2$ Control Curve was commissioned.
3. Values less than 50% - less air is needed to achieve $O_2$ setpoint compared to when $O_2$ Control Curve was commissioned.

Expected behavior: should stay relatively consistent from low fire to high fire. Should change with external changes such as combustion air temperature, barometric pressure, draft, heating value of fuel, air filters becoming dirty, etc.

***State O2 Ctrl***
Menu path: *Params & Display > O2 Contr/Alarm > Process Data*

This parameters identifies the state of the $O_2$ control. Possible values are:
1. Deactivated – the $O_2$ control was either manually or automatically deactivated
2. Locked – the manipulated variable (amount of trim) is being held at the last value
3. LockTStart – $O_2$ control is waiting to engage after light-off (waiting for ***NumberTauSuspend*** to expire)

4. InitContr – $O_2$ control is preparing to engage but is still locked
5. LockTLoad – $O_2$ control is engaged but locked (in pre-control) due to a load change
6. Active – $O_2$ control is actively trimming based on setpoint and measured $O_2$ value
7. LockTCAct - $O_2$ control is engaged but locked due to an excursion from setpoint

If the state of the $O_2$ control is shown as "locked", parameter ***Diag Reg State*** will show the reason why.

***Diag Reg State***
Menu path: *Params & Display > O2 Contr/Alarm > Process Data*

This parameter shows the reason that the $O_2$ control is locked. Possible values are:
0 – The load is below the load limit set by parameter ***O2 CtrlThreshold***
1 – The load controller is in auto tune
2 – The $O_2$ sensor is being tested for response (self-check of $O_2$ sensor)
3 – The fuel-air ratio or $O_2$ trim curves are being programmed
4 – The measured % $O_2$ is above the lean limit or below the rich limit
5 – There is an error in the PLL52 module
6 – There is an error in the pre-control

## Using the $O_2$ Alarm Functionality without $O_2$ Trim

As was previously mentioned, the $O_2$ system can be run in different modes. The modes are set using parameter ***OptgMode***, which can be found using the following menu path:

Menu path: *Params & Display > O2 Contr/Alarm > Gas/Oil Settings*

The available operating modes are:
1. **Man deact** - deactivates all $O_2$ trim and $O_2$ alarm functionality. $\%O_2$ value can still be viewed.
2. **O2 Limiter** - Only the $O_2$ alarm is active. This means that a lockout will occur if the lean limit (***O2 MaxValue***) is exceeded for a time longer than what is set for parameter ***Time O2 Alarm***. Likewise, a lockout will occur if the rich limit ($O_2$ alarm curve) is exceeded for a time longer than what is set for parameter ***Time O2 Alarm***. No trim functionality is active.
3. **O2 Control** - The same as O2 Limiter, except $O_2$ trim is now enabled. Exceeding rich or lean limits will cause a lockout in the same way as the O2 Limiter mode.
4. **ConAutoDeac** – In this mode, exceeding the rich or lean limits will not cause an immediate lockout. Exceeding the rich or lean limits will cause the $O_2$ trim to be temporarily deactivated. After a waiting time of 3 times Tau, the measured $\%O_2$ will be re-evaluated. If the $\%O_2$ is higher than the rich alarm, the $O_2$ trim will be deactivated. If the $\%O_2$ is lower than the rich alarm, a lockout will occur. The $O_2$ trim can be automatically deactivated and reactivated the number of times allowed by parameter ***NumMinUntilDeact***. The maximum setting is 5. If more than 5 deactivations and reactivations occur, then the $O_2$ trim mode will be changed to “auto deact” until the $O_2$ trim control is manually re-activated.
5. **Auto deact** - indicates that the $O_2$ trim has been automatically deactivated for some reason. See error codes in Section 7. Do not select this mode.

If only the $O_2$ alarm function is to be used and the $O_2$ trim has not been commissioned, a few key parameters must be set. These are:

1. ***O2 MaxValue*** - set to the maximum safe $\%O_2$ (wet) for all points.
2. ***O2 Alarm*** curve - enter the minimum safe $\%O_2$ (wet) for each point.
3. ***Tau Low-FireOEM*** - the delay time of the burner / boiler at low fire
4. ***Tau High-FireOEM*** - the delay time of the burner / boiler at high fire
5. ***OptgMode*** - set to O2 Limiter

If the $O_2$ trim has not been commissioned, it will be necessary to manually enter ***Tau Low-FireOEM*** and ***Tau High-FireOEM***. These Tau times do not have to be as accurate as if the $O_2$ trim was being used. These can be manually timed by using the $O_2$ reading on the AZL (recommended), or typical values can be used. Higher turndown burners will produce longer low fire Tau times. Typically, for a 5-to-1 turndown burner, ***Tau Low-FireOEM*** is between 10-20 seconds. ***Tau High-FireOEM*** is typically 4 seconds or less.

## How the $O_2$ is Measured with the QGO20 Sensor and PLL52 Module

The QGO20 is a Zirconium type sensor that is heated to approximately 1292°F. The high temperatures allow oxygen to diffuse through the Zirconium cell and produce a milli-volt signal. This milli-volt signal is referred to as the Nernst Voltage. The Nernst Voltage that is produced for a given $\%O_2$ is dependent on the concentration of oxygen and the temperature of the Zirconium cell. The PLL52 module reads both the Nernst Voltage and the temperature of the Zirconium cell. With this information, the $\%O_2$ can be accurately determined and sent back to the LMV52 over CANbus.

As well as taking the milli-volt signals and converting these to CANbus data, the PLL52 also serves as the controller for the Zirconium cell's heating element. The PLL52 is also a place to connect the combustion air temperature sensor and the stack gas temperature sensor.

Three milli-volt signals originate in the QGO20:

| | |
|---|---|
| 1. Nernst Voltage from the Zirconium oxide $O_2$ cell | terminals B1 and M |
| 2. $O_2$ cell thermocouple signal | terminals B2 and M |
| 3. Cold junction thermocouple compensation | terminals G2 and U3 |

These three milli-volt signals between the QGO20 and the PLL52 must be run in a separate conduit and / or a shielded cable.

See Section 2 for complete details on wiring the QGO20 to the PLL52.

High voltage wires are also connected from the PLL52 to the QGO20 for the heater. It is very important that these wires are run in a separate conduit away from the milli-volt signals.

**NOTE: Never connect the QGO20 heater directly to line voltage! Permanent damage will result to the heating element and the sensor. High voltage wires for the heater to the QGO20 must come from the PLL52 module. See Section 2 for more information.**

Also, due to possible interference on the milli-volt signals, the PLL52 must be installed within 30 feet of the QGO20.

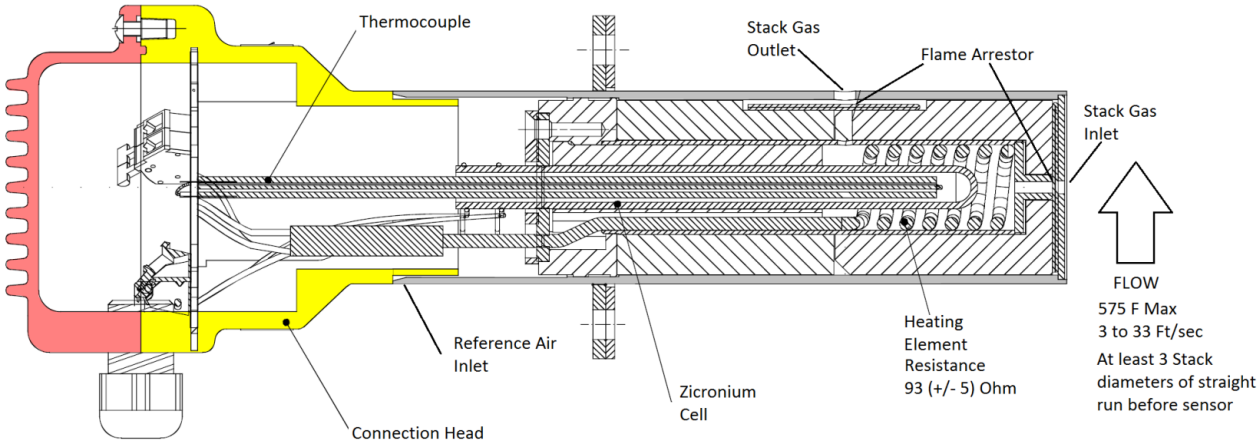


**Figure 6-10: Cut-Away View of the QGO20 Sensor (shown without collector)**

As previously mentioned, the QGO20 is only capable of measuring $\%O_2$ wet. This is true since it is an in-situ oxygen sensor, not needing any type of water trap, desiccant, or filter. In-situ sensors typically have a much shorter delay time (Tau time) and require much less maintenance than other types of $O_2$ sensors.

Most hand-held combustion analyzers measure $\%O_2$ dry, and therefore will be considerably different from the $\%O_2$ wet measured by the QGO20 sensor.

Figure 6-11 shows these approximate differences along with the raw milli-volt signal from the Zirconium oxide $O_2$ cell. As one would expect, the raw milli-volt signal varies with sensor temperature, but this variance is compensated by the PLL52 module so the LMV52 is fed an accurate, compensated $O_2$ value.

| $\%O_2$ Wet | $\%O_2$ Dry (Natural Gas) | Output Voltage (mV) @ 1292 F | Output Voltage (mV) @ 1320 F |
|---|---|---|---|
| 0.1 | 0.1 | 111.79 | 113.59 |
| 1 | 1.3 | 63.61 | 64.63 |
| 1.5 | 1.9 | 55.12 | 56.01 |
| 2 | 2.5 | 49.10 | 49.90 |
| 2.5 | 3.1 | 44.43 | 45.15 |
| 3 | 3.8 | 40.62 | 41.27 |
| 3.5 | 4.4 | 37.39 | 38.00 |
| 4 | 5.0 | 34.60 | 35.16 |
| 4.5 | 5.6 | 32.13 | 32.65 |
| 5 | 6.3 | 29.93 | 30.41 |
| 5.5 | 6.9 | 27.93 | 28.39 |
| 6 | 7.5 | 26.11 | 26.54 |
| 6.5 | 8.1 | 24.44 | 24.83 |
| 7 | 8.7 | 22.89 | 23.26 |
| 7.5 | 9.3 | 21.44 | 21.79 |
| 8 | 9.9 | 20.09 | 20.42 |
| 8.5 | 10.6 | 18.83 | 19.13 |
| 9 | 11.2 | 17.63 | 17.91 |
| 10 | | 15.43 | 15.67 |
| 11 | | 13.43 | 13.65 |
| 12 | | 11.61 | 11.80 |
| 13 | | 9.94 | 10.10 |
| 14 | | 8.38 | 8.52 |
| 15 | | 6.94 | 7.05 |
| 16 | | 5.59 | 5.68 |
| 17 | | 4.32 | 4.39 |
| 18 | | 3.13 | 3.18 |
| 19 | | 1.99 | 2.03 |
| 20 | | 0.92 | 0.94 |
| 20.9 | | 0.00 | 0.00 |

**Figure 6-11: $O_2$ Wet, $O_2$ Dry, and Nernst Voltage Conversion (approximate)**

## Considerations when Using $O_2$ Trim with FGR

Some burners use a high percentage of FGR (FGR flow compared to air flow) to lower NOx emissions. Since flue gases change in $\%O_2$ and are being drawn back into the blower in significant quantities, these types of burners are inherently more difficult to trim the $\%O_2$ in the stack.

The reason behind this increased difficulty is the oxygen content of the air / FGR mixture is dependent on the $\%O_2$ in the stack, which adds another dynamic variable into the system. On a burner without FGR, the oxygen content of the air at the blower intake is always a constant 20.9% $O_2$. Naturally, a larger percentage of FGR (20%) has the potential to vary the oxygen content of the air / FGR mixture at the blower intake more than a small percentage of FGR (5%) would.

Moreover, a large percentage of FGR can change the oxygen content of the air / FGR mixture at the blower intake in a way that can set up a "cycle of intensification". An example of this cycle is below:

1. The $\%O_2$ in the stack increases for some reason.
2. The $\%O_2$ in the FGR also increases.
3. The oxygen content of the air / FGR mixture at the blower intake increases, which increases the $\%O_2$ in the stack even more.

Naturally, the example above would also hold if the $\%O_2$ in the stack decreased, except the cycle of intensification would serve to push the burner rich instead of lean.

In addition to the cycle of intensification that is inherent to many FGR burners, the mechanical design of the burner / boiler influences the repeatability of the FGR flow. The repeatability of the FGR flow has a large influence on how well the $O_2$ trim system can work. Obviously, non-repeatability in the FGR flow will cause non-repeatability in the $\%O_2$ read in the stack and therefore the operation of the $O_2$ trim.

Two different methods of inducing FGR into a burner are illustrated and explained below, and their behaviors from an FGR flow repeatability standpoint are discussed.

<u>Method shown in Figure 6-12:</u>

Pressure P1 relative to pressure P2 (differential pressure across the FGR damper) changes drastically with firing rate. Very little differential pressure will be generated across the FGR damper at low fire, requiring the FGR damper to be mostly open to achieve even minimal FGR flow at low fire. As firing rate increases, P1 will decrease and P2 will increase, yielding much more differential pressure across the FGR damper. As a result, the FGR damper will need to be ramped closed as the burner is ramped up to high fire. Due to the much higher differential pressure at high fire the FGR damper might be oversized for effective control at high fire. Other points to consider:

1. If using $O_2$ trim, trimming with the air actuator (set to "air influenced") closed should serve to decrease P1 and decrease the FGR flow slightly (depending on the position of the stack damper).

2. At low fire when the FGR valve is mostly open, even small changes in the differential pressure across the FGR damper will cause large changes in FGR flow.

3. If the fixed air inlet damper and / or the fixed stack damper are adjusted to provide adequate differential pressure across the FGR valve at low fire, pressure drops across these fixed dampers at high fire will be high, requiring a larger blower.

Small pressure changes (pressure inside a boiler room vs the pressure in the stack) are common. These are typically due to doors being opened and closed in the boiler room and convective effects in the stack. Depending on the installation, these changes might be non-existent or they might be as large as 2” WC. With the arrangement shown in Figure 6-12, even small pressure changes can cause the FGR flow to be non-repeatable. A few examples are given below:

Example: At low fire, the differential pressure across the FGR control valve is 0.2" WC. Some external change increases P1 by 0.2” WC. This represents a very small absolute change in pressure, but a 100% change in the differential pressure across the FGR control valve which will lead to a large percentage change in FGR flow.

Example: At high fire, the differential pressure across the FGR control valve is 6.0" WC. Some external influence increases P1 by 0.2” WC. This represents a very small absolute change in pressure and a 3.3% change in differential pressure across the FGR control valve. This will lead to a negligible percentage change in FGR flow.

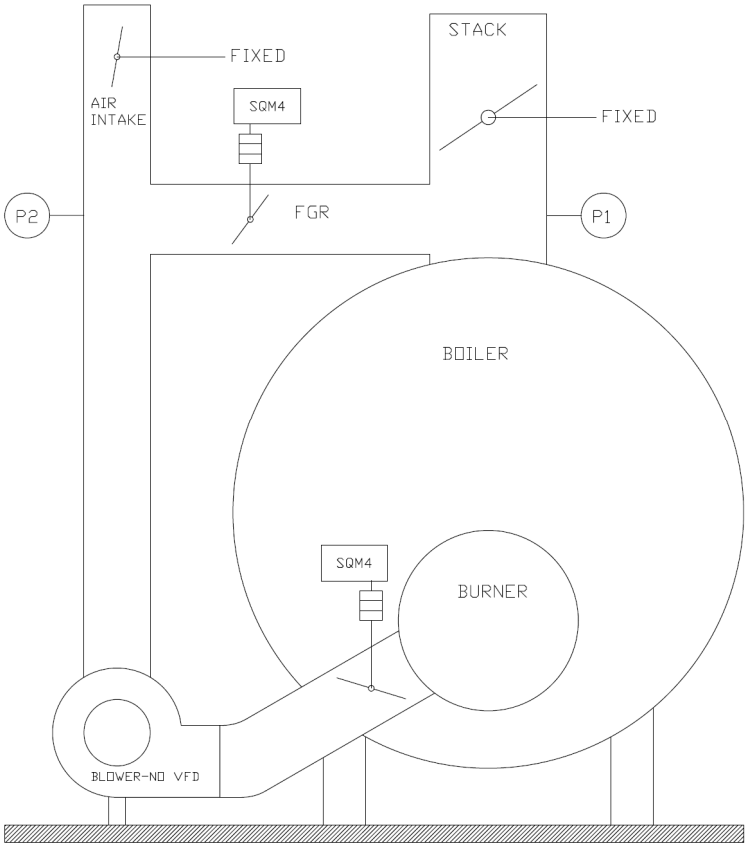


**Figure 6-12: FGR Burner with no VFD and an Air Damper on the Blower Outlet**

Method shown in Figure 6-13:

Pressure P1 relative to pressure P2 (differential pressure across the FGR damper) is more constant with firing rate. Differential pressure will be generated across the FGR damper at low fire by using the suction of the blower against the air damper. The differential pressure across the FGR damper can also be adjusted with the speed of the VFD. As firing rate increases, P2 will increase (less vacuum) and P1 will increase due to increased pressure behind the stack damper, yielding a more consistent differential pressure. As a result, the FGR damper can be sized more appropriately and should offer better control. Other points to consider:

1. If using $O_2$ trim, the effect that the trim has on FGR flow can be adjusted. Three possibilities:

    a. If only the air damper is trimmed (set to "air influenced"), trimming closed and reducing air flow will increase the vacuum at P2 and increase FGR flow relative to air flow.

    b. If only the VFD is trimmed (set to "air influenced"), trimming slower and reducing air rate will reduce the vacuum at P2 and reduce the FGR flow relative to the air flow.

    c. If both the air damper and VFD are trimmed (set to "air influenced"), trimming closed should keep the vacuum at P2 relatively constant and keep the FGR flow constant relative to the air flow.

2. Differential pressure across the FGR damper is significant even at low fire due to the vacuum provided by the blower. Small changes in the differential pressure across the FGR damper will cause small changes in FGR flow. FGR flow will be more repeatable as compared to the method in Figure 6-12, especially at low to mid fire.

3. No fixed air dampers exist for the blower intake, and the fixed damper in the stack may be able to be opened further, reducing the blower pressure requirements.

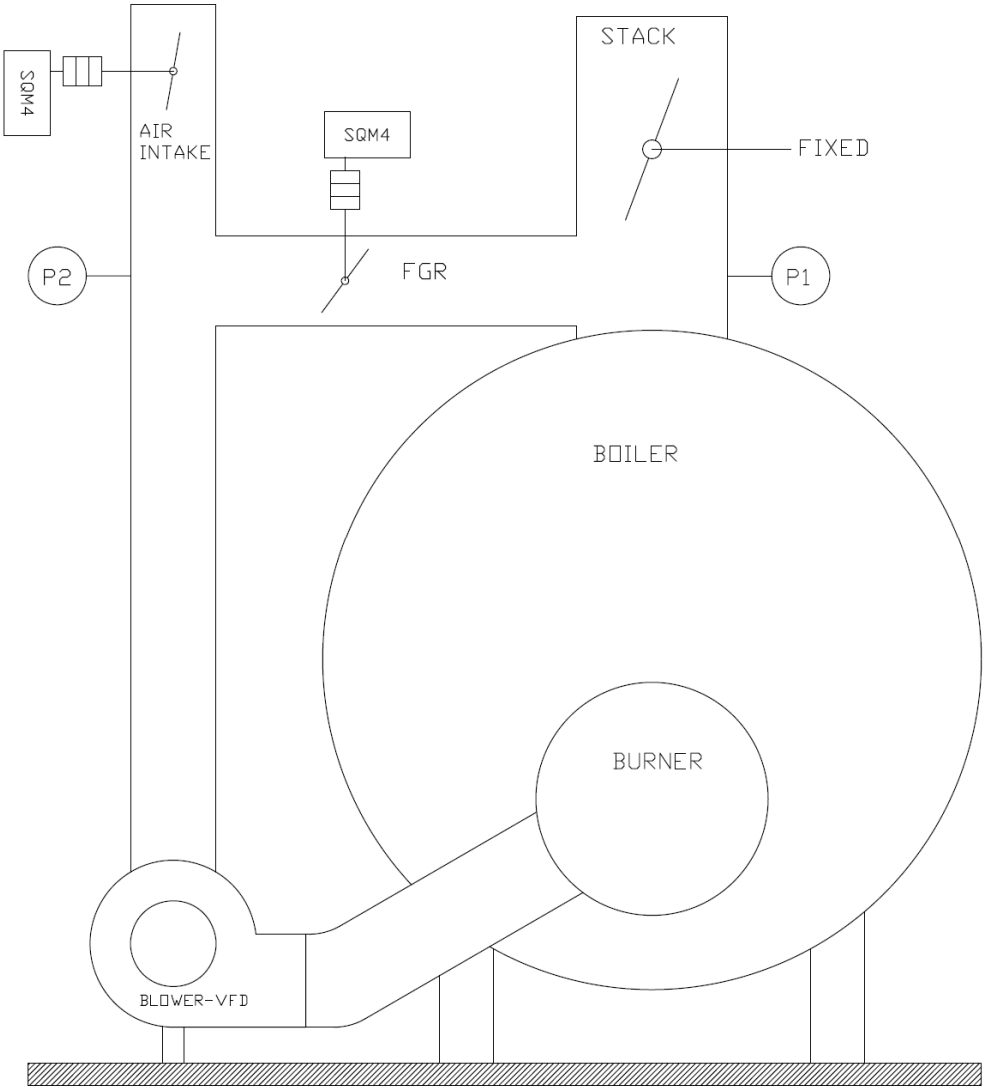


**Figure 6-13: FGR Burner with VFD and Air Damper on Blower Inlet**

In summary, the arrangement shown in Figure 6-13 is preferable for the following reasons:

1. Better repeatability of FGR flow with slight pressure changes from P1 to P2.
2. Greater adjustability of the FGR to air ratio when trimming.
3. The ability to draw more FGR at lower firing rates.

## Additional Tips for $O_2$ Trim Commissioning and Tuning

- If the AZL52 displays that the $O_2$ trim has been automatically deactivated, it can be re-activated under the following menu path:

  *Operation > O2Ctrl activate*

  Repeated deactivations can be caused by many different problems, including inaccurate load numbers.

- All of the points on the $O_2$ Control Curve should be completed in one session, and the session should be less than an hour. This is preferable, since ambient conditions (air temperature and barometric pressure) typically do not change a significant amount in one hour.

- Every point on the $O_2$ Ratio Control Curve must have a corresponding point on the rich limit ($O_2$ alarm) curve. For Point 2 and above, every point on the $O_2$ Ratio Control Curve must also have a corresponding point on the $O_2$ Control Curve. If this is not done, an immediate $O_2$ trim deactivation will occur.

- If a point on the $O_2$ Ratio Control Curve is changed (actuator positions), the corresponding point on the $O_2$ Control Curve will be deleted. The $O_2$ trim will automatically deactivate and cannot be re-activated if points are missing on any of the curves ($O_2$ Ratio Control, $O_2$ Control, $O_2$ Alarm).

- Considering the items above, if one point is changed on the $O_2$ Ratio Control Curve, then the $O_2$ Ratio Control Curve and the $O_2$ Control Curve should be redone so that the Lambda Factor at each point is known to be based on the same ambient conditions. Setting the $O_2$ Ratio Control Curve and the $O_2$ Control Curve in a piecemeal fashion typically does not yield reliable $O_2$ trim operation.

- The LMV52.240 can only decrease the air influencing actuator positions below their settings on the $O_2$ Ratio Control Curve. This is typically not an issue if the gap between the $O_2$ Ratio Control Curve and the $O_2$ Control Curve is large enough (1%). The LMV52.440 can increase or decrease the air influencing actuator positions, so the gap between the $O_2$ Ratio Control Curve and the $O_2$ Control Curve can be smaller (0.5%). This also gives the LMV52.440 the ability to deal with more challenging applications such as FGR and low NOx mesh burners.

- Most burners will flame fail in a safe way if operated too lean. However, overly lean operation may be hazardous for some burner designs. If one of these burners is encountered, the $O_2$ Ratio Control Curve can be set to function as the lean limit using the following menu path:

  *Params & Display > O2Contr/Alarm > Gas/Oil Settings > O2 Alarm > Type O2 MaxValue*

  Set this to “O2MaxCurve”. For this type of burner it is also recommended to set the operating mode of the $O_2$ trim to “O2 Control”, so a lockout will occur if the lean limit is reached.

  *Params & Display > O2Contr/Alarm > Gas/Oil Settings > OptgMode* = **O2 Control**

- If a combustion air temperature sensor is installed and activated, the air temperature will be recorded when the last point is entered into the $O_2$ Control Curve. This temperature is stored under the following menu path:

  *Params & Display > O2Contr/Alarm > Gas/Oil Settings > Startmode > Adjust. Temp O2*

  This is the temperature that will be compared against the current air temperature to perform temperature compensated light-off if parameter ***StartMode*** is set to "IgnLoadTC" or "IgnPtWithTC" (LMV52.440 only).

- When terminal X5-03.2 is properly configured (see Section 3 - Parameters), it can be energized to cause a deactivation of the $O_2$ trim. When this is done, the LMV52 will operate on the $O_2$ Ratio Control Curve. The $O_2$ rich and lean limits will be active as long as there is a valid $O_2$ signal. This deactivation via X5-03.2 occurs without a notification being displayed on the AZL52.

- Pre-purge must be set so that 20.9% (+/- 2.0% $O_2$) is read by the QGO20 sensor. If this is not met, a lockout or deactivation will occur depending on the setting of parameter ***OptgMode***.

- When using the LMV52.440 on low or ultra-low NOx mesh burners, a ***StartMode*** of "IgnPtWithTC" is typically used combined with adjusting ***O2InitOffset*** in the negative direction (more rich). If done properly, this should make the transition from light-off position to low fire richer than normal operation so that the transition is stable and reliable under varying environmental conditions. While the burner is being held at Point 2 awaiting ***NumberTauSuspend*** to expire, the ***O2InitOffset*** will gradually dissolve and the $\%O_2$ will be trimmed to setpoint before the burner is released to modulate.

- The AGO gas collector should be mounted per the requirements shown below:

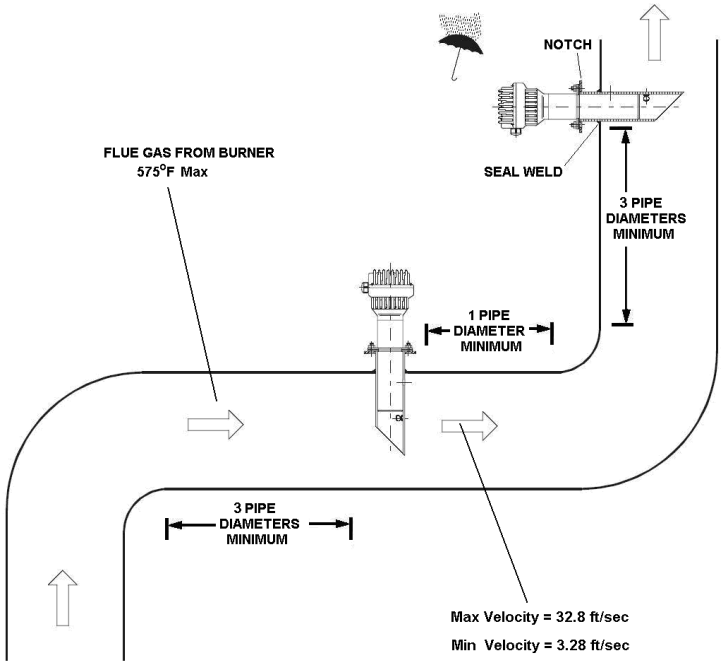

| | |
|---|---|
| Section 1 | Overview |
| Section 2 | Wiring |
| Section 3 | Parameters |
| Section 4 | Commissioning |
| Section 5 | VSD |
| Section 6 | $O_2$ Trim |
| **Section 7** | **Troubleshooting** |
| Section 8 | Modbus |
| Section 9 | ACS450 |
| Section 10 | Revision History |
| Appendix A | Application Guide |
| Appendix B* | Complimentary Products Guide |


*Can be found at www.scccombustion.com.

HOME

| | |
|---|---|
| Section 1 | Overview |
| Section 2 | Wiring |
| Section 3 | Parameters |
| Section 4 | Commissioning |
| Section 5 | VSD |
| Section 6 | $O_2$ Trim |
| **Section 7** | **Troubleshooting** |
| Section 8 | Modbus |
| Section 9 | ACS450 |
| Section 10 | Revision History |
| Appendix A | Application Guide |
| Appendix B* | Complimentary Products Guide |


*Can be found at www.scccombustion.com.

HOME

# 7-1: Troubleshooting Introduction

The LMV5 has an extensive list of fault codes to help clarify the nature of any fault. Section 7-3 describes what every fault code is and gives some guidance on how to correct it.

The most common issues seen on the LMV5 are described in greater detail in Section 7-2 to offer additional troubleshooting help. The issues covered in Section 7-2 are:

General

CANbus Faults Including "*AZL not on Bus*" and "*System Test*" ..... 2
Fault Positioning Actuator – Error Code 15 ..... 6
Internal Fault Actuator – Error Code 19 ..... 7
Flame Failure – Error Code 25 or 26 ..... 8
Open Circuit / Short Circuit Sensor Faults – Error Code A6 (Diagnostics 50…5A) ..... 9
Open Safety Loop – Error Code 21 ..... 10
LMV5 Will Not Start (Stays in Phase 12) ..... 11
LMV5 Will Not Modulate Properly ..... 12

O2 Trim

$O_2$ Sensor is Not Reading ..... 13
$O_2$ Sensor Reading Grossly High or Low ..... 14
$O_2$ Sensor Reads But Responds Very Slowly ..... 14
Ambient or Stack Temperature Sensor Reading Incorrectly ..... 15
AZL says "*O2 Module not active or not Available*" ..... 15
AZL Says "*O2 Setpoint must lie 0.1% below O2 Ratio Control" or "O2 Setpoint must lie 0.1% above O2 Min*" ..... 16
AZL Says "*Measurement not Successful*" When Measuring the Delay Time for $O_2$ Trim ..... 17
AZL Says "*O2 Trim Control Automatically Deactivated*" ..... 18

Variable Speed Drive (VSD)

VSD Will Not Operate ..... 19
Unsuccessful VSD Standardization ..... 20
AZL Says "*Fan Speed Not Reached*" or "*Control Range Limitation VSD Module*" ..... 22

# 7-2: Common Problems

**CANbus Faults Including "*AZL not on Bus*" and "*System Test*"**

The majority of all LMV5 wiring errors are related to the wiring of the CANbus network. The CANbus network includes the following components:

- LMV5 controller
- AGG5.210 transformer(s)
- One main fuse (FU1) and two 12VAC fuses (FU2, FU3)
- AZL display
- AGG5.643 special CANbus cable
- SQM45/48/91 actuators
- PLL52 $O_2$ module (if equipped)

An illustration of the CANbus network with a single transformer is shown below in Figure 7-2.1.

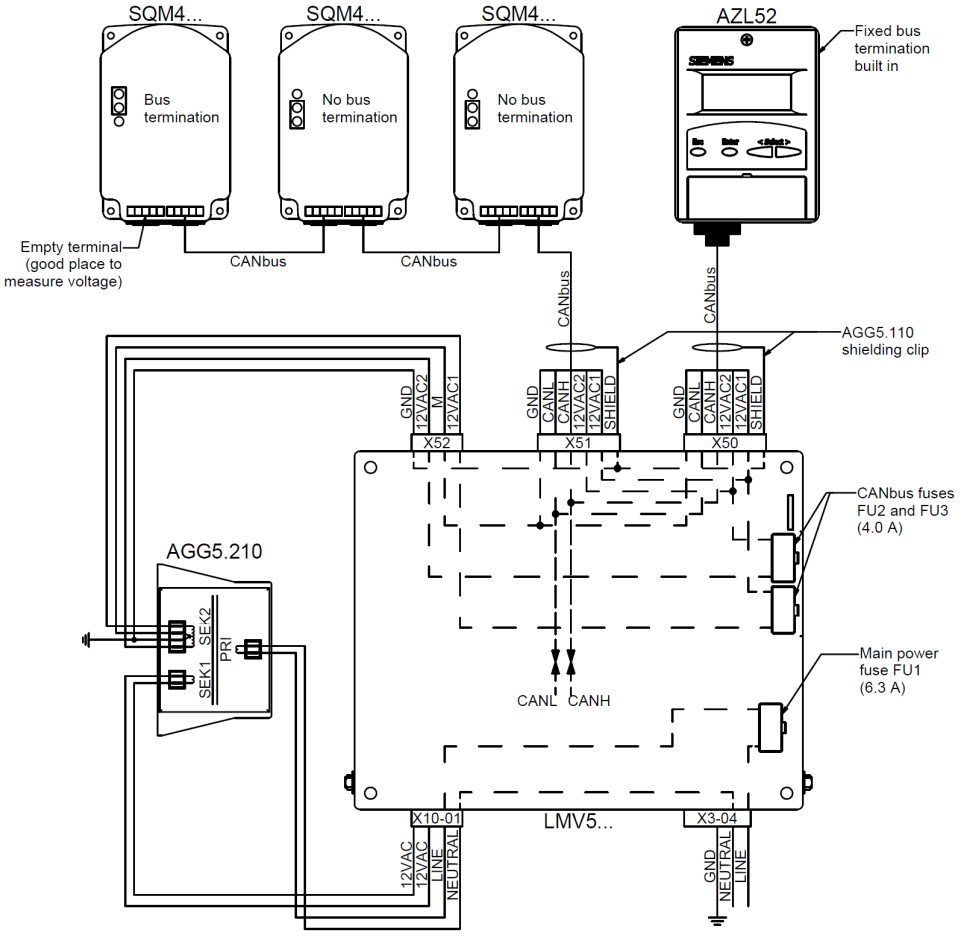


**Figure 7-2.1: Illustration of the LMV5 CANbus Network**

## CANbus Faults Including "*AZL not on Bus*" and "*System Test*" (continued)

The most common CANbus errors are:

- "AZL not on Bus"
- Stuck in "System Test"
- Error code 99
- Error code A7, diagnostic 17

However, there are many additional error codes that can also be caused by an issue with the CANbus network. The following procedure can be used to diagnose any CANbus related error:

1. Take the cover off of the last actuator (or PLL52 $O_2$ module) on the CANbus network wired to terminal X51 on the LMV5. This should have only one 5-pin green connector plugged into it. The other CANbus terminals should be empty, and is a perfect place to measure voltage. Ensure that the following voltages are present on the pins of the empty CANbus terminal:

   - 12 VAC between pins 12VAC1 and GND
   - 12 VAC between pins 12VAC2 and GND
   - 24 VAC between pins 12VAC1 and 12VAC2

   When measuring to ground (GND), it is ok to have anywhere from 10.2-13.2 VAC as long as both measurements are the same. For example, it is okay to have 11 VAC between pins 12VAC1 and GND as long as there is also 11 VAC between pins 12VAC2 and GND. In addition, the voltage between pins 12VAC1 and 12VAC2 must be exactly double the other two measurements. If these three voltage measurements are correct, skip to step 3.

2. If one or more of the voltage measurements is incorrect, check the following:

   - CANbus fuses FU2 and FU3 are located on the right hand side of the LMV5. Check that these fuses are not blown. If either one is blown, check the LMV5 wiring for incorrect terminations. Once any wiring errors have been fixed, replace the blown fuse.
   - The most common wiring error has to do with pins 3 and 4 on transformer terminal SEK2. Pin 3 on terminal SEK2 should be wired to terminal X52, pin 4 on the LMV5. Pin 4 on terminal SEK2 should be wired to terminal X52, pin 3 on the LMV5.
   - Make sure pin 3 on terminal SEK2 of the transformer is grounded properly.
   - Make sure the rest of the CANbus network is wired properly. See Section 2 for additional wiring assistance.

## CANbus Faults Including "*AZL not on Bus*" and "*System Test*" (continued)

3. Check the LMV5 fault history. If the faults always occur in phase 38, the CANbus errors are being caused by noise from the ignition transformer. Make sure the ignition transformer is grounded properly and has a good neutral. Also, make sure any CANbus wires that run close to the ignition transformer are in proper conduit. It may be necessary to either relocate the ignition transformer or add a shield between the ignition transformer and any nearby CANbus wires.

4. Unplug the 6-pin green connector plugged into terminal X51 on the top of the LMV5. This leaves the AZL, the LMV5, and the cable between them as the only CANbus components still plugged in. Reset the fault on the LMV5. At this point, two things can happen:

    - If the AZL faults with "Fault Feedback Air Actuator", then the AZL, the LMV5, and the cable between them are all working properly. This means that there is likely an issue with the wiring of the actuators or $O_2$ module. Go to step 5.

    - If the same CANbus fault recurs, then there is a problem with the AZL, the LMV5, or the cable between them. Check the wiring and terminations on the cable. Though unlikely, the AZL or the LMV5 might be damaged and need to be replaced. If a spare AZL is available, try it. If no spare AZL is present, check for any noticeable damage to either the AZL or the LMV5 to determine which component to replace.

5. To find the wiring issue with the actuators or $O_2$ module, plug components back in one at a time to terminal X51 on the LMV5 to determine which component is causing the CANbus errors. First, plug in <u>just the cable (unplugged from the actuator)</u> that connects the first actuator to terminal X51 on the LMV5. Reset the fault on the LMV5. If "Fault Feedback Air Actuator" shows up again, the cable itself is okay. Next, plug in <u>just the first actuator (unplugged from the cable running to the second actuator)</u>. Reset the fault on the LMV5. As long as actuator feedback faults continue to show up after each component is plugged in and the LMV5 is reset, continue to plug in another component. At some point, plugging in a component should cause the CANbus fault to recur.

6. Once the component causing the CANbus errors has been found, check the following to correct the problem:

    - Make sure all terminations to the actuator are done properly and no wire strands from adjacent pins are touching one another and causing a short.

**CANbus Faults Including "*AZL not on Bus*" and "*System Test*" (continued)**

- Make sure the shielding of the CANbus cable is grounded properly. The shielding of the CANbus cable is immediately under the plastic sheathing and encircles all five conductors. The shielding on all segments of the CANbus cable must have continuity with terminal X51.1. This can be checked with a multi-meter by connecting one probe on the AGG5.110 shielding clip attached to terminal X51.1, and the other probe on the last actuator (or $O_2$ module) on the CANbus network.

- If everything else checks out, and every time one of the actuators is plugged in it immediately causes a CANbus fault, replace the appropriate actuator.

## Fault Positioning Actuator – Error Code 15

An error code 15 essentially means that an actuator has not reached the position it is being told to drive to by the LMV5. The diagnostic code will detail which actuator is having the problem. If an error code 15 is encountered, check for the following causes:

1. **Binding.** At full torque output, the actuator cannot move the valve or damper it is trying to move. This is typically due to the actuator pushing against mechanical stops on the valve or damper. Check that the actuator was properly coupled. This may also be caused by a valve or damper that requires more torque than the actuator is capable of.

2. **Temperature.** All SQM… actuators are rated for a maximum operating temperature of 140°F. However, when operating temperatures exceed 120°F, the torque output of the actuator is decreased by 15%. If this is the case, reduce the heat to the actuator.

3. **Duty Cycle.** All SQM… actuators are rated for a 50% duty cycle, meaning that the actuator can only be moving half of the time. Duty cycles over 50% can cause the actuator to overheat which reduces the torque output severely. If the actuator is constantly moving, improve the PID settings and / or adjust parameter ***MinActuatorStep***.

4. **Flutter.** This typically occurs on air or FGR dampers. Highly turbulent flow across a damper blade can cause an alternating torque to be applied to the damper shaft. This in turn puts an alternating torque on the actuator shaft. For example, let's say that the LMV5 is commanding the air actuator to drive to 50.0° which is a highly turbulent spot on the air damper. The following action may be seen:

    - LMV5 sees actuator at 50.3° and repositions it counterclockwise
    - LMV5 sees actuator at 49.7° and repositions it clockwise
    - LMV5 sees actuator at 50.3° and repositions it counterclockwise
    - LMV5 sees actuator at 49.7° and repositions it clockwise

    In this scenario, eventually the LMV5 determines that the actuator cannot reach the 50.0° position and faults with an error code 15. If a flutter is present on the air damper, a constant torque can be applied to the air damper assembly to eliminate the effects of the flutter.

5. **Power.** All of the actuators for the LMV5 run off of 24 VAC power. Measure between terminals 12VAC1 and 12VAC2 on the actuator to ensure there are approximately 24 VAC provided to the actuator throughout the firing range. If there are not, see Section 2 for help on CANbus wiring. Depending on the load requirements of the system, a second transformer may be necessary.

## Fault Positioning Actuator – Error Code 15 (continued)

6. If everything else checks out okay, replace the actuator.

## Internal Fault Actuator – Error Code 19

SQM45 and SQM48 actuators have dual potentiometers that provide feedback to the LMV5 to verify actuator position. When these two potentiometers disagree, the LMV5 faults with an error code 19. The diagnostic code will detail which actuator is having the problem. If an error code 19 is encountered, check the following:

1. Ensure that parameter ***allowed Pot.diff*** is set to 15. This allows a maximum disagreement of 1.5° between the two potentiometers.

2. If ***allowed Pot.diff*** is set to 15 and the LMV5 continues to receive error code 19, the actuator must be replaced. The likely cause of the damaged actuator is excessive side load on the actuator shaft or excessive vibration. Over time, excessive side load on the actuator shaft can wear down the shaft bearings of the actuator. Since the potentiometers are mounted directly onto the back of the shaft, they will disagree more and more as the shaft bearings wear. Excessive vibration can also cause potentiometer wear and lead to an error code 19.

3. It is imperative that proper couplings are used when mounting actuators. It is highly recommended to use an SCC flexible coupling on all actuators. SCC couplings eliminate excessive side load due to their design. Furthermore, SCC couplings allow up to 1/16” of parallel misalignment and 3° of angular misalignment between the actuator and valve shafts. See Document No. CPBK-1000 for more information on available flexible couplings.

4. It is also important to use a rigid mounting bracket when mounting any actuator. Excessive vibration over time can wear the potentiometer tracks. If the wear is too severe, error code 19 can result. Rigid mounting brackets help to minimize the effects of vibration. SCC offers a wide variety of brackets and fully assembled valve actuator assemblies to ensure proper mounting of actuators. See Section 1 for more details.

## Flame Failure – Error Code 25 or 26

If either an error code 25 or error code 26 is encountered, a flame failure has occurred. An error code 25 means that a flame failure occurred during pilot, while an error code 26 means that a flame failure occurred during operation. To remedy either fault, check the following:

1. Increase the flame failure response time through the following menu path:

   *Params & Display > BurnerControl > Configuration > ConfigFlameDet > ReacTmeLossFlame*

   The LMV5 has a base flame failure response time of 0.8 seconds. The setting of parameter ***ReacTmeLossFlame*** adds an additional 0.2 – 3.2 seconds for a maximum of a 4 second flame failure response time (FFRT).

2. Use a flame source to check if the flame scanner is defective. The flame signal can be viewed using the following menu path:

   *Params & Display > BurnerControl > Configuration > ConfigFlameDet > FlameSignal*

   Parameter ***FlameSig QRI_B*** can be used to view the flame signal when using an infrared scanner (QRI2…) or an ultraviolet scanner (QRA7…). Parameter ***FlameSig ION*** can be used to view the flame signal when using a flame rod. A flame failure occurs below a 20% flame signal. If the flame signal reads 0% when using a flame source, check the wiring of the scanner. See Section 2 for wiring assistance. If the wiring is correct, replace the defective scanner.

3. If an error code 25 occurred, check the wiring of the ignition transformer and pilot valve. Also, check to make sure any manual shutoff valves are open on the pilot line.

4. If an error code 25 occurred, check the position of the air damper during ignition. This can be viewed using the following menu path:

   *Params & Display > RatioControl > Gas Settings > SpecialPositions > IgnitionPos > IgnitionPosAir*

   Decrease this position if the pilot flame is being blown out.

5. If an error code 26 occurred, there could be flame signal decay due to glowing refractory inside the boiler. If this is the case, replace the QRI2… infrared scanner with a QRA7… ultraviolet scanner.

## Open Circuit / Short Circuit Sensor Faults – Error Code A6 (Diagnostics 50…5A)

An error code A6 (diagnostic code 50…5A) means that the LMV5 is configured for a certain type of sensor, but it is not detecting that the sensor is connected. This means that a parameter in the LMV5 is set incorrectly, the wiring of the sensor is incorrect, or the sensor has failed.

**Note**: Some of the fault code messages refer to Input 2 or Input 3. Input 2 is terminal X61 which is used for pressure sensors. Input 3 is terminal X62 which is used for remote setpoint and modulation signals.

Check the following:

1. Ensure that the parameters used to program the analog inputs are set correctly:

   - ***LC_OptgMode***
   - ***Sensor Select***
   - ***Ext Inp X61 U/I***
   - ***Ext Inp X62 U/I***

   See Section 3 for information on how these parameters should be set.

2. If all of the above parameters are set correctly, check the wiring of the attached sensors. See Section 2 for information on how to wire sensors to the LMV5.

3. On a steam boiler, a temperature sensor can be used in addition to the pressure sensor for the cold start function. If this is the case, check the setting of parameter ***AdditionalSens***. See Section 3 for more information on how to set this parameter.

4. An additional FGR temperature sensor can be installed to perform an FGR hold function. If parameter ***FGR-Mode*** is set to "temperature", "temp.contr.", or "TCautoDeact", an FGR sensor is expected to be wired into terminal X60 or X86, depending on the setting of ***FGR-sensor***. If this parameter is set to X60, check that the sensor is wired correctly.

5. If $O_2$ trim is being used, an ambient air temperature sensor can be wired into terminal X60. Check the setting of parameter ***AirTempX60PT1000***. If this is set to activated, a Pt1000 temperature sensor is expected to be wired into terminal X60.

## Open Safety Loop – Error Code 21

The safety loop is meant only for safety limits such as an auxiliary low water cutout or a high limit. The safety loop must be complete, and cannot be reconfigured. The wiring of the safety loop is shown below:

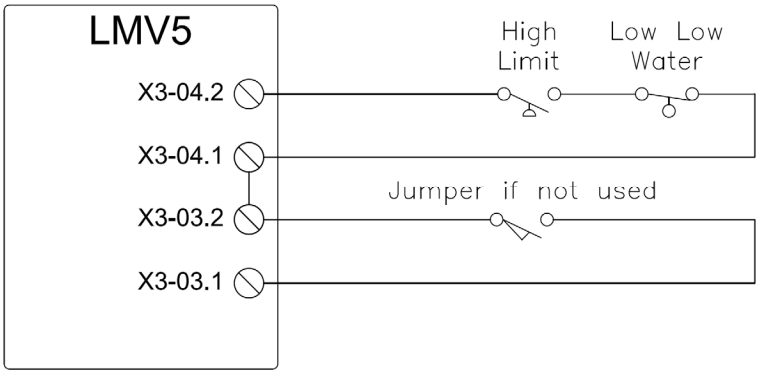


If an error code 21 is encountered, check the following:

1. **The burner flange switch wired between terminals X3-03.1 and X3-03.2.** There should be 120 VAC on terminal X3-03.1 at all times. If a burner flange switch is not present, a jumper must be placed between terminals X3-03.1 and X3-03.2.

2. **Operating switches in the safety loop**. Operating (cycling) switches should not be wired into the safety loop. If a cycling switch is placed in this loop and it cycles off, the LMV5 will lockout. The cycling switch should be relocated in series with the burner on / off switch wired to X5-03.1:

    - If the LMV5 is in any external load controller mode (*ExtLC*…), this is used to cycle the burner on and off.
    - If the LMV5 is in any internal load controller mode (*IntLC*…), then a cycling switch may not be necessary, since this is done automatically in the LMV5 using parameters ***SD_ModOn*** and ***SD_ModOff***.

3. **The safety loop between terminals X3-04.1 and X3-04.2.** There should be 120 VAC on terminal X3-04.1 at all times. If there is not, then one or more of the devices wired into the safety loop are open. Check each device wired into the safety loop to find which one is open.

## LMV5 Will Not Start (Stays in Phase 12)

1. Ensure that the LMV5 is in automatic mode through the following menu path:

   *ManualOperation > Autom/Manual/Off* = **Automatic**

2. The burner will not start if the safety loop is open. Verify that there is 120 VAC on both terminals X3-03.1 and X3-04.1.

3. Verify that there is 120 VAC at burner switch input terminal X5-03.1.

4. Verify that the LMV5 is not in alarm. If so, correct the issue causing the alarm and reset the fault.

5. Verify that ignition positions are defined for all activated actuators, including the VSD. This can be done through the following menu path:

   *Params & Display > RatioControl > Gas/Oil Settings > SpecialPositions > IgnitionPos*

6. Verify that the actual value of the boiler is less than the switch on threshold of the burner (setpoint + ***SD_ModOn***).

## LMV5 Will Not Modulate Properly

1. Ensure that the LMV5 is in automatic mode through the following menu path:

   *ManualOperation > Autom/Manual/Off* = **Automatic**

2. Check the PID settings and make sure that they are set for the application.

   P-Part – This is the **proportional band.** The proportional band increases firing rate based on how far below setpoint the temperature / pressure is. Smaller values cause a more aggressive response to a drop in pressure / temperature relative to setpoint. Values that are too small will cause hunting. Typical setting: 10% to 30%.

   I-Part – This is the **integral part**, which serves to eliminate steady state "droop" caused by the proportional band setting. Thus, this works hand in hand with ***P-Part*** to bring the pressure / temperature up to setpoint. Smaller values cause a more aggressive response (a setting of 1 is most aggressive). Values that are too small will cause overshoot. Typical setting: 80 sec to 300 sec. A setting of 0 deactivates the feature, but this is not recommended.

   D-Part – This is the **derivative part**, which serves to eliminate overshoot, and allows a more aggressive integral setting. Larger values cause a more aggressive response. ***D-Part*** is not needed on many steam boilers. If needed, small values of less than 20 typically work well. A setting of 0 deactivates the feature. Large values will typically cause hunting.

3. Check the load limit parameters (***UserMaxLoad***, ***MinLoad***, ***MaxLoad***) to verify that they are not limiting modulation.

4. Check the load mask parameters under each fuel and verify that they are not preventing modulation. These can be checked using the following menu path:

   *Params & Display > RatioControl > Gas/Oil Settings > LoadLimits*

   Default values are: ***LoadMaskLowLimit*** = 0%, ***LoadMaskHighLimit*** = 0%.

5. If the LMV5 goes to high fire in phase 52, check parameter ***StartPointOp*** under each fuel. This should typically be set to 1 (low fire).

**Note:** If PID values are set properly, the load should change no more than once every 8 seconds on most installations. If PID values are set improperly, the duty cycle of the SQM… actuator can be exceeded.

## O2 Sensor is Not Reading

If the $O_2$ value on the main screen is displayed as "XXXX", check the following:

1. Ensure that the QGO20 $O_2$ sensor is activated through the following menu path:

   *Params & Display > O2 Module > Configuration > O2 Sensor* = **QGO20**

2. The PLL52 $O_2$ module controls the QGO20 $O_2$ sensor's heater to achieve a sensor temperature of approximately 1292 $^{o}$F. The sensor cannot read %$O_2$ if the sensor is below 1202 $^{o}$F. Check the temperature of the QGO20 sensor through the following menu path:

   *Params & Display > O2 Module > Process Data > QGO SensorTemp*

   If the temperature is below 1202 °F, check the heating load to the $O_2$ sensor:

   *Params & Display > O2 Module > Process Data > QGO HeatingLoad*

   The maximum QGO heating load is 60%. If the heating load is at or near 60%, the QGO20 sensor temperature should be increasing. If it is, the $O_2$ sensor will begin reading once the temperature is over 1202 °F. If the temperature is not increasing, check the following:

   - The stack velocity may be too high, thus cooling the sensor. The maximum stack velocity is 33 ft / second.
   - The wiring between the $O_2$ sensor and the PLL52 $O_2$ module may be incorrect. Refer to Section 2 to check the wiring between the two devices.
   - The heating element in the QGO20 $O_2$ sensor may be damaged. Measure the resistance between terminals Q4 and Q5 on the QGO20 $O_2$ sensor. There should be between 5 and 150 Ohms between these terminals. If there is an open circuit between these two terminals, the heating element has been damaged and the QGO20 $O_2$ sensor needs to be replaced.

**Note:** The QGO20 sensor can take up to two hours to achieve operating temperature on the initial startup.

## O2 Sensor Reading Grossly High or Low

If the $O_2$ readings from the $O_2$ sensor are grossly high or low, check the following:

1. The milli-volt signals from the QGO20 to the PLL52 could have interference. Ensure that the high and low voltage wires that run from the QGO20 to the PLL52 are in a separate conduit.

2. The QGO20 sensor reads $\%O_2$ wet. Most combustion analyzers read $\%O_2$ dry, so the $O_2$ number shown on the AZL52 is typically at least 1% $O_2$ lower than the combustion analyzer.

3. The QGO20 sensor may be mounted incorrectly, and the sensor is not picking up a representative reading of the $\%O_2$ in the stack.

## O2 Sensor Reads But Responds Very Slowly

If the $\%O_2$ being displayed is responding slowly to combustion changes, check the following:

1. Ensure that the QGO20 sensor is clean. This can be done by shutting off the power to the LMV52, and removing the QGO20 from the stack. Be careful as the sensor is likely to be very hot. After the QGO20 is removed from the stack, let it cool for at least an hour.

   After the sensor has cooled, it can be blown out using low pressure compressed air (less than 15 PSIG) through the top of the sensor and out the front. If this is done when the QGO20 sensor is hot, the ceramics inside the sensor will most likely be cracked and the sensor will need to be replaced.

2. Check the orientation of the QGO20 sensor and the AGO20 collector. The one notch on the AGO20 collector's flange should be between the two notches on the QGO20 sensor's flange. Also, ensure that the bevel of the collector is pointed into the flow of the stack gas.

3. Check the internal resistance of the QGO20 sensor using the following menu path:

   *Params & Display > O2 Module > Process Data > QGO Resistance*

   This value increases as the sensor ages. As the internal resistance increases, the response time of the sensor also increases. A new sensor has 0 Ohms, while the maximum resistance is 150 Ohms, indicating replacement of the sensor is necessary.

## Ambient or Stack Temperature Sensor Reading Incorrectly

If the ambient or stack temperature sensor wired into the PLL52 are not reading (displayed as "XXXX" on the AZL screen), or the sensors are reading incorrectly, check the following:

1. Ensure that the sensors are wired into the PLL52 module correctly. See Section 2 to verify proper wiring.

2. Both sensors must be a 2-wire, 1000 Ohm, platinum or nickel RTD. Check to see that the sensors are activated and properly configured under the following menu paths:

   *Params & Display > O2 Module > Configuration > SupAirTempSens*
   *Params & Display > O2 Module > Configuration > FlueGasTempSens*

**Note:** The ambient and stack temperature sensors are not necessary for $O_2$ trim. However, if one or both inputs are configured for a sensor and either sensor is not reading, the $O_2$ trim will not activate.

## AZL Says "*O2 Module not active or not Available*"

If the AZL displays the message "O2 Module not active or not Available" when trying to access one of the following menus, the LMV52 has lost communication with the PLL52 $O_2$ module.

*Params & Display > O2Contr/Alarm* -or-
*Params & Display > O2 Module*

Check the CANbus wiring between the LMV52 and the PLL52. See Section 2 for wiring assistance. Once communications have been re-established, access to the $O_2$ menus will be allowed.

To deactivate the $O_2$ module entirely, use the following menu path:

*Params & Display > SystemConfig > O2Ctrl/LimitrGas(Oil)* = **man deact**

## During O2 Commissioning, AZL Says "*O2 Setpoint must lie 0.1% below O2 Ratio Control" or "O2 Setpoint must lie 0.1% above O2 Min"*

When setting the $O_2$ control curve, one of the following messages appears:

- *"O2 Setpoint must lie 0.1% below O2 Ratio Control*"
- "*O2 Setpoint must lie 0.1% above O2 Min*".

If this is the case, check the following:

1. Ensure that there is an absolute minimum of 0.2 %$O_2$ between the $O_2$ alarm curve and the $O_2$ ratio control curve at every point on these curves.

2. Also ensure that the %$O_2$ that is to be set on the $O_2$ control curve is at least 0.1% $O_2$ above the $O_2$ alarm curve and 0.1% $O_2$ below the $O_2$ ratio control curve.

**Note 1**: In most cases, the %$O_2$ gap between the curves should be larger than the absolute minimum. Depending on the burner characteristic, doing this may also lead to more trouble-free operation. See Section 6 for more information on these curves.

- It is preferable to have a 1 to 1.5% gap between the $O_2$ alarm curve and the $O_2$ control curve.
- It is preferable to have a 1.5% gap between the $O_2$ ratio control curve and the $O_2$ control curve.

**Note 2**: When setting up the three $O_2$ curves, these curves are set using the %$O_2$ values displayed on the AZL5. These values are given on a wet basis.

A separate combustion analyzer (which typically measures dry %$O_2$) is required for reference and to monitor CO and NOx production.

## AZL Says "*Measurement not Successful*" When Measuring the Delay Time for O2 Trim

When setting the low fire point or the high fire point on the $O_2$ control curve, the AZL measures what is called the "delay time" (Tau time). The delay time is defined as the length of time it takes a change in the air damper position to be detected by the $O_2$ sensor. This time is longer at low fire and shorter at high fire due to gas velocity. If an error occurs while trying to measure this delay time, the AZL says "*Measurement not Successful*".

To troubleshoot this, check the following:

1) Verify that ***OptgMode*** is set to "man deact" using the following menu path:

   *Params & Display > O2Contr/Alarm > Gas/Oil Settings > OptgMode*

2) Verify that ***LowfireAdaptPtNo*** is set to 2 (combustion curve point 2) or higher if desired. By default, this parameter is set to "X" (undefined). The menu path for this parameter is:

   *Params & Display > O2Contr/Alarm > Gas/Oil Settings > Control Param > LowfireAdaptPtNo*

3) If both of the above parameters are set correctly, then it is possible that the $O_2$ readings on the ratio control curve were set incorrectly. When setting each point on the $O_2$ control curve, the LMV5 will prompt with the message "When value stable continue w ENTER". Pressing ENTER then sets the $\%O_2$ for the ratio control curve. If ENTER is pressed too early before the $O_2$ value has stabilized, a non-representative $O_2$ value will be entered for the ratio control curve. If this is the case, go back into the $O_2$ control curve and at each point wait to get a stable reading before pressing ENTER to ensure that the $O_2$ reading is representative of the current air damper position. 30-60 seconds is not too long to wait once the arrow (>) turns into a colon (:) indicating that the actuators have stopped moving.

## AZL Says "*O2 Trim Control Automatically Deactivated*"

Many different problems can cause the $O_2$ trim control to automatically deactivate. When this happens, check the fault history. The most recent fault will likely be error code BF, diagnostic 00. This is the error code for an automatic deactivation of the $O_2$ trim. Check the previous error code in the fault history to see what actually caused the automatic deactivation. The most common are:

1. **Error code B5, diagnostic code 01.** This means that the current $O_2$ value went below the $O_2$ alarm curve for more than 3 seconds, which caused the $O_2$ trim to deactivate.

    a. Make sure the load numbers on the Ratio Control Curve match the actual fuel flow. Use a fuel flow meter if possible.

    b. Increase the $\%O_2$ gap between the $O_2$ Control Curve and the $O_2$ Alarm Curve at and around the point where the fault occurred (can be determined by the load listed in the fault history).

    Also, parameter ***O2ModOffset*** can be increased in 0.5% increments. Parameter ***LoadCtrlSuspend*** can be decreased in 1% increments. See Section 3 for more information on these parameters.

2. **Error code AB, diagnostic code 15 or 16.** Check the configuration of the ambient and stack temperature sensors. If these sensors are activated and are not wired in or are not functioning correctly, the $O_2$ trim will automatically deactivate immediately after it is reactivated.

3. **Error code AB, diagnostic code 20.** Check the temperature of the QGO20 sensor using the following menu path:

    *Params & Display > O2 Module > Process Data > QGO SensorTemp*

    The temperature should be at least 1202 $^{o}$F. If the temperature falls below this value during prepurge or anytime during operation, the $\%O_2$ cannot be read and the $O_2$ trim will automatically deactivate. If this is the case, the QGO20 sensor may be mounted improperly or the gas velocity may be too high.

## VSD Will Not Operate

If the VSD will not operate the blower (blower will not spin) when the LMV52 standardization is activated, check the following:

1. Ensure that the VSD is activated through the following menu path in the LMV52:

   *Params & Display > RatioControl > Gas/Oil Settings > VSD* = **activated**

2. The VSD cannot standardize if the safety loop is open. Check that the safety loop is closed by making sure there is 120 VAC on terminal X3-03.1. If there is not, check the limits in the safety loop and the burner flange to see which limit is open.

3. Ensure that the LMV52 is not in alarm. If so, reset the fault and attempt to standardize again.

4. Verify that the 0/4-20 mA signal and the run/stop contact wired between the VSD and the LMV52 are wired correctly. See Section 2 for more information on wiring.

5. Verify that the three-phase motor wiring between the VSD and the motor is correct.

6. Verify that the VSD is set up properly for the motor it is driving. Specifically, check the following:

   - The VSD should be spanned so that 0/4mA equals 0Hz and 20mA = 62Hz (on a 60 Hz grid frequency). See Section 5 for more information.
   - The VSD is in remote mode so that it looks for a 0/4-20mA signal and a run/stop contact. Closing the run/stop contact should cause the VSD to operate the motor.

7. Disconnect the analog signal and run/stop contact wires between the VSD and the LMV52. Use a handheld 0/4-20mA source and a toggle switch to verify that the VSD responds to a contact closure and a varying 0/4-20mA signal.

   If the VSD does not respond, correct the configuration of the VSD.

   If the VSD responds to the contact closure and the varying 0/4-20mA signal, then go to the next step.

8. With the wires between the LMV52 and VSD still disconnected, use a multi-meter to verify that the LMV52 outputs about 19.5mA during the standardization (see note below). Also verify that the run/stop contact in the LMV52 closes and remains closed during the standardization.

## Unsuccessful VSD Standardization

For information on what VSD standardizing is or how to perform standardization, see Section 5.

The standardized speed can be viewed using the following menu path:

*Params & Display > VSD Module > Configuration > Speed > StandardizedSp*

For a 3600 RPM motor, the standardized speed is typically 3500 +/- 100 RPM. If this is the case, the standardization was successful. If the VSD does not standardize successfully, check the following:

1. The VSD cannot standardize if the safety loop is open. Check that the safety loop is closed by making sure there is 120 VAC on terminal X3-03.1. If there is not, check the limits in the safety loop and the burner flange to see which limit is open.

2. Ensure that the LMV52 is not in alarm. If so, reset the fault and attempt to standardize again.

3. Verify the speed wheel is installed on the blower motor correctly and the gap between the speed sensor and the speed wheel is correct (about 1/16”). Also, use Section 2 to verify that the wiring from the speed sensor to the LMV52 is correct. The yellow LED on the back of the speed sensor should blink every time a speed wheel “finger” passes by the nose of the sensor. If it does not blink, the sensor is wired incorrectly, the sensor is mounted too far from the speed wheel, or the sensor is defective.

4. Check to ensure that the air damper opens when the standardization is activated.
   If this does not happen, set the air actuator to “air influenced” using the following menu path:

   *Params & Display > RatioControl > Gas/Oil Settings > AirActuator*

5. Check the ramp times on the LMV52 and the VSD.
   The ramp times on the VSD must be faster (shorter) than the ramp times on the LMV52.
   The LMV52 ramp times can be found using the following menu paths:

   *Params & Display > RatioControl > Times > OperatRampMod*
   *Params & Display > RatioControl > Times > TimeNoFlame*

   In general, the VSD ramp times should be set about 5 seconds faster (shorter) than the LMV52 ramp times.

## Unsuccessful VSD Standardization (continued)

6. Monitor the speed of the blower motor during the standardization process. After standardization is activated, the real time speed can be read using the following menu path:

   *Params & Display > VSD Module > Speed > Absolute Speed*

   During standardization, the absolute speed should rise up to a peak value and hold steady at that value for a few seconds. Then, the value should drop back down to zero (or near zero).

   The peak value that is seen should be recorded as the standardized speed. If this doesn't happen, it's likely that there's a problem with the VSD or the speed sensor.

## AZL Says "*Fan Speed Not Reached*" or "*Control Range Limitation VSD Module*"

During burner operation, the LMV52 sends a 0/4-20 mA signal to the VSD to control the speed of the blower. The speed sensor sends feedback to the LMV52 to let it know the actual speed of the blower. If the speed is too high or too low, the LMV52 will increase or decrease the signal to the VSD accordingly. However, there are limits on how much the LMV52 can increase or decrease the signal. If these limits are met, the LMV52 will lockout with one of the following messages:

- "Fan Speed Not Reached" – Error code 15, diagnostic 10 or 40
- "Control Range Limitation VSD Module" – Error code A9, diagnostic 0D

"*Fan Speed Not Reached*" indicates that the blower speed is still too low even though the LMV52 has increased the 0/4-20mA signal as far as possible.

"*Control Range Limitation VSD Module*" indicates that the blower speed is too high even though the LMV52 has decreased the 0/4-20mA signal as far as possible.

If either of these messages appears, do the following:

1. Increase the ramp times of both the VSD and LMV52. Shorter ramp times on the VSD and LMV52 create a more demanding application for the VSD. Simply put, a shorter ramp time will cause the VSD to draw or absorb much more amperage for a given change in blower speed since the change in speed occurs more quickly. To adjust the ramp times of the LMV52, use the following menu paths:

   *Params & Display > RatioControl > Times > OperatRampMod*
   *Params & Display > RatioControl > Times > TimeNoFlame*

2. Large blower motors connected to large, heavy blower wheels have high rotating inertia. As the inertia of the blower wheel increases, the power needed to accelerate and decelerate the blower increases. If increasing the ramp times does not help, a braking resistor may need to be installed on the VSD to help decrease the speed of the blower motor more quickly.

# 7-3: Complete Error Code List

| Error Code | Diag. Code | Device | Display | Meaning for the LMV5x System | Corrective Action |
|---|---|---|---|---|---|
| *Fault with Base Unit (LMV5)* | | | | | |
| 01 | 01 | LMV5 | Internal Fault Basic Unit | ROM error | If fault occurs sporadically, reduce electrical noise. If fault occurs continously, replace LMV5. |
| 02 | Any # | | | RAM error | |
| | 01 | | | RAM error in register bank 0 (LMV51...) | |
| | 02 | | | RAM error in IDATA area (LMV51...) | |
| | 03 | | | RAM error in XDATA area (LMV51...) | |
| | 04 | | | RAM error of variables used | |
| | 05 | | | RAM error variable consistency | |
| | 06 | | | RAM error reading back test pattern | |
| | 07 | | | Error RAM test code run | |
| 03 | Any # | | | Error in connection with data comparison (internal communication) between µC1 and µC2 | |
| | 01 | | | Timeout during program run synchronization prior to data transmission | |
| | 02 | | | Timeout during data transmission | |
| | 03 | | | CRC error during data transmission | |
| | 05 | | | Timeout during program run synchronization with initialization | |
| | 10 | | | Error counter "Flame intensity outside tolerance" has elapsed | Check flame detector signal. If ok, and fault re-occurs, replace LMV5 |
| | 11 | | | Error counter "Target phase unequal" has elapsed | If fault occurs continously, replace LMV5. |
| | 12 | | | Error counter "Reset-lockout input unequal" has elapsed | |
| | 40 | | | Fuel train unequal | |
| | 41 | | | Relay control word unequal | |
| | 42 | | | ROM-CRC signature unequal | |
| | 43 | | | Phase unequal | |
| | 44 | | | (Key + main loop counter) unequal | |
| 04 | - | | | Unsuccessful synchronization of the 2 µCs | |

| Error Code | Diag. Code | Device | Display | Meaning for the LMV5x System | Corrective Action |
|---|---|---|---|---|---|
| *Fault with Flame scanner (QRI) or Base Unit (LMV5)* | | | | | |
| 05 | Any # | LMV5 / Flame Dect. | Fault Flame Detector Test | Fault during test of the flame signal amplifier | If fault occurs sporadically: Improve shielding / isolation of flame detector wires. High LMV5 temperatures can also cause this fault. If fault occurs constantly: Lower LMV5 temperature, replace flame detector, or replace LMV5. |
| | 01 | | | Fault during test of the flame signal amplifier | |
| | 02 | | | Crosstalk fault between test pin and flame signal amplifier channel (with LMV52 FSV channel QRI... / QRB...) | |
| | 03 | | | Crosstalk fault between test pin and FSV channel ION (LMV52 only) | |
| | 10 | | | Monitoring of redundancy contact on external high-temperature or flame safegaurd | Check the wiring and the parameters of the external safety limit thermostat / external flame safeguard including the redundancy contact. |
| *Fault with Base Unit (LMV5)* | | | | | |
| 06 | Any # | LMV5 | Internal Fault Basic Unit | Fault internal hardware tests | If fault occurs sporadically, reduce electrical noise. If fault occurs continuously, replace LMV5. |
| | 01 | | | Fault during test of the ignition relay | |
| | 02 | | | Fault during test of the safety relay | |
| | 03 | | | Fault during voltage supervision test | |
| | 04 | | | Relay voltage not switched off after reset | |
| *Fault with devices or wiring connected to the Base Unit (LMV5)* | | | | | |
| 10 | Any # | Devices conn. to LMV5 | Internal Fault Basic Unit | Basic unit has detected an improper circuit at one of the outputs, a faulty diode, or a short-circuit in the power supply of the contact feedback network. The diagnostic code indicates the input affected. | 1) Check connections of the neutrals to all of the connected switches, valves, etc...<br><br>2) Check for inductive loads that cause voltage to be present on the terminal after the LMV de-energizes the terminal. If voltage exists on an output terminal, such as a fuel valve, after the LMV de-energizes the terminal, this will cause a fault. Voltage must drop to zero on the terminal within about 10 ms after the terminal is de-energized. |
| | 01 | | | Load controller on / off | |
| | 02 | | | Fan contact | |
| | 03 | | | Selection of oil-firing | |
| | 04 | | | Selection of gas-firing | |
| | 05 | | | Reset | |
| | 06 | | | Pressure switch oil maximum | |
| | 07 | | | Pressure switch oil minimum | |
| | 08 | | | Pressure switch valve proving | |
| | 09 | | | Safety valve oil feedback | |
| | 0A | | | Fuel valve 1 oil feedback | |
| | 0B | | | Fuel valve 2 oil feedback | |
| | 0C | | | Fuel valve 3 oil feedback | |
| | 0D | | | Safety valve gas feedback | |
| | 0E | | | Fuel valve 1 gas feedback | |
| | 0F | | | Fuel valve 2 gas feedback | |
| | 10 | | | Pilot valve gas feedback | |

| Error Code | Diag. Code | Device | Display | Meaning for the LMV5x System | Corrective Action |
|---|---|---|---|---|---|
| *Fault with devices or wiring connected to the Base Unit (LMV5)* | | | | | |
| 10 | 11 | Devices conn. to LMV5 | Internal Fault Basic Unit | Safety chain burner flange | 1) Check connections of the neutrals to all of the connected switches, valves, etc...<br><br>2) Check for inductive loads that cause voltage to be present on the terminal after the LMV de-energizes the terminal. If voltage exists on an output terminal, such as a fuel valve, after the LMV de-energizes the terminal, this will cause a fault. Voltage must drop to zero on the terminal within about 10 ms after the terminal is de-energized. |
| | 12 | | | Safety relay feedback | |
| | 13 | | | Pressure switch gas minimum | |
| | 14 | | | Pressure switch gas maximum | |
| | 15 | | | Ignition transformer feedback | |
| | 16 | | | Fan pressure switch | |
| | 17 | | | Start release oil | |
| | 18 | | | Heavy oil direct start | |
| | 19 | | | Load controller open | |
| | 1A | | | Load controller closed | |
| | 1B | | | Start release gas | |
| 11 | 01 | | | Basic unit has detected a short-circuit in the contact feedback network | |
| *Fault with Connected actuators or VSD* | | | | | |
| 15 | Any # | Actuator / VSD Control | Fault Positioning Actuator or Fan Speed Not Reached | LMV5 has detected a positioning error on one or several actuators, or the VSD module if equipped. | **If error occurs on one actuator only :**<br>1) Ensure torque requirements of dampers / valves are less than actuator output. Actuators running over rated 50% duty cycle may have significantly reduced torque output.<br>2) Verify that no damper / valve is bound.<br>3) If 1 and 2 do not solve the problem: replace actuator.<br><br>**If error occurs on multiple actuators (01-3F) :**<br>1) Verify that the CANBus wiring is correct.<br>2) Verify that shields (screens) on CANBus cables are connected properly.<br><br>**If error occurs on VSD :**<br>1) Check speed sensor on motor for correct installation, especially gap between sensor and wheel.<br>2) Check for filters, damping, and / or delays on the input signal to the VSD. The VSD should respond to the input signal in a linear fashion. Extend VSD and LMV5 ramp times. |
| | 01-3F | | Fault Positioning Actuator | The diagnostic value is made up of the following faults or their combinations (the individual diagnostic codes are added up in hexadecimal format) | |
| | 01 | Air Actuator | | Positioning fault air actuator | |
| | 02 | Active Fuel | | Positioning fault fuel actuator | |
| | 04 | Aux1 Actuator | | Positioning fault auxiliary actuator 1 | |
| | 08 | Aux2 Actuator | | Positioning fault auxiliary actuator 2 | |
| | 10 | VSD module | Fan Speed Not Reached | The fan in combination with the VSD has not reached the required speed | |
| | 20 | Aux3 Actuator | Fault Positioning Actuator | Positioning fault auxiliary actuator 3 | |
| | 40 | VSD Module | Fan Speed Not Reached | The difference of actual value and speed setpoint is greater than permitted by parameter ***TolQuickShutdown*** | |

| Error Code | Diag. Code | Device | Display | Meaning for the LMV5x System | Corrective Action |
|---|---|---|---|---|---|
| *Fault with Base Unit (LMV5) Ratio Control, O2 Trim, VSD* | | | | | |
| 16 | Any # | LMV5 | Internal Fault Basic Unit | Basic unit has detected a plausibility fault in the ratio control system. | The diagnostic code describes the cause of the fault (see below). |
| | 00 | | | Ratio curve of the air actuator is not fully defined | Ensure that actuators that are addressed and activated have their positions defined. Check curve points to see if correct values have been entered for the actuator or VSD. Readjust the ratio curve, if required. |
| | 01 | | | Ratio curve of the fuel actuator is not fully defined | |
| | 02 | | | Ratio curve of auxiliary actuator 1 is not fully defined | |
| | 03 | | | Ratio curve of auxiliary actuator 2 is not fully defined | |
| | 04 | | | Ratio curve of auxiliary actuator 3 is not fully defined | |
| | 05 | | | VSD curve is not fully defined | |
| | 0A | | | Calculated P-part outside the permissible range | Check parameters (P Low-Fire, I Low-Fire, Tau Low Fire, P High-Fire, I High-Fire, Tau High-Fire). These values normally self-set when the delay time is measured. Check the values of these parameters against the maximum and minimum ranges. Readjust O2 control curve if necessary. |
| | 0B | | | Calculated I-part outside the permissible range | |
| | 0C | | | Calculated system delay time outside the permissible range | |
| | 0D | | | Calculated O2 setpoint outside the permissible range | The O2 control curve must be 0.1% O2 lower than the %O2 measured at the ratio control curve, and 0.1% above the O2 alarm curve. Readjust curves. |
| | 0E | | | Calculated O2 min. value outside the permissible range | |
| | 0F | | | Calculated O2 ratio value outside the permissible range | |
| | 14 | | | Calculated standardized value lies outside the permissible range | Check if the correct values have been entered for the standardized values.<br>Readjust O2 trim control, if required, or repeat the settings. |
| | 20 | | | With hysteresis compensation: Permissible target positioning range exceeded | If fault occurs sporadically, reduce electrical noise.<br>If fault occurs continuously, replace LMV5. |
| | 21 | | | The load / point number predefined by the AZL… lies outside the permissible range | |
| | 22 | | | Unplausible program branch | |
| | 23 | | | Unplausible fuel-air ratio phase | |
| | 40 | | | Unplausible target positions | |

| Error Code | Diag. Code | Device | Display | Meaning for the LMV5x System | Corrective Action |
|---|---|---|---|---|---|
| *Fault with Base Unit (LMV5)* | | | | | |
| 17 | Any # | LMV5 | Internal Fault Basic Unit | (Internal) communication error of ELV | If fault occurs sporadically, reduce electrical noise. If fault occurs continuously, replace LMV5. |
| | 3F | | | Detection of different data when making the data comparison | |
| | 01 | | | Timeout with program synchronization prior to data transmission | |
| | 02 | | | Timeout with data transmission | |
| | 03 | | | CRC fault during data transmission | |
| 18 | Any # | | Invalid Curve Data | Corruption in the combustion curve data | Values on curve should be within 0.0% - 100.0% for load and VSD, 0.0° - 90.0° for actuators. If possible, adjust curve values back into the valid range. If this fault occurs on a unit that was functioning correctly after commissioning, replace LMV5. |
| *Fault with Actuator* | | | | | |
| 19 | Any # | Actuator | Internal Fault Actuator | Basic unit (ratio control system) has detected a fault when comparing potentiometer channels A and B. Diagnostic code shows on which actuator the fault occurred. See diagnostic code. | 1) If fault occurs constantly: Replace actuator according to diagnostic code. If a solid coupling was being used on the defective actuator, replace with a flexible coupling. After actuator(s) are replaced, make sure that the actuators do not "hunt" during operation. This can be done by adjusting parameter ***MinActuatorStep*** and the PID loop. |
| | 01..2F | | | The diagnostic value is made up of the following faults or their combinations (the individual diagnostic codes are added up in hexadecimal format) | |
| | 01 | Air Actuator | | Fault occurred on the individual actuator (see diagnostic code) when comparing potentiometer channels A and B | |
| | 02 | Active Fuel Actuator | | | |
| | 04 | Aux 1 Actuator | | | |
| | 08 | Aux 2 Actuator | | | |
| | 20 | Aux 3 Actuator | | | |

| Error Code | Diag. Code | Device | Display | Meaning for the LMV5x System | Corrective Action |
|---|---|---|---|---|---|
| *Fault with Actuator (VSD) Positioning or Actuator (VSD) Run Time* | | | | | |
| 1A | 01 | LMV5 | Slope too steep | A section of actuator curve is too steep. | Check maximum slope sections of actuator curves. Maximum allowable slopes are as follows:<br>- 3.6° per 0.1% load (30 sec ramp)<br>- 1.8° per 0.1% load (60 sec ramp)<br>- 0.9° per 0.1% load (120 sec ramp)<br>If these maximums are exceeded, adjust curve section below these maximum slopes. |
| 1B | Any # | | Operation in Parameter Setting Mode quit | Curve parameters (actuator curves) programming mode is still active in phase 62 (drive to low fire and shutdown) and the target positions (normal operation) have not been reached. | When setting the curve parameters, the plant should be operated in manual mode. This prevents the internal load controller from triggering the change to shutdown. Response of the internal temperature limiter can trigger this same fault. However, the curve point currently being set can still be stored in standby or lockout. |
| 1C | Any # | | Ignition Pos not defined | Ignition positions for activated actuators (or VSD) have not been set. See diagnostic code to indicate the faulted actuator. | Set the ignition position of the actuator(s). The ignition positions for each fuel are independent, and the positions are also independent of the low fire position. |
| | 01..3F | | | The diagnostic value is made up of the following faults or their combinations (the individual diagnostic codes are added up in hexadecimal format). | |
| | 01 | | | Ignition position for air actuator not set. | |
| | 02 | | | Ignition position for active fuel actuator not set. | |
| | 04 | | | Ignition position for aux1 actuator not set. | |
| | 08 | | | Ignition position for aux2 actuator not set. | |
| | 10 | | | Ignition position for VSD not set. | |
| | 20 | | | Ignition position for aux3 actuator not set. | |

| Error Code | Diag. Code | Device | Display | Meaning for the LMV5x System | Corrective Action |
|---|---|---|---|---|---|
| *Fault with Positioning an Actuator or VSD Speed* | | | | | |
| 1D | Any # | Actuator / VSD / LMV5 | Fault Running Time | Running time fault of actuators or VSD. | 1) Check parameters ***TimeNoFlame*** and ***OperatRampMod***. These should be set to values greater than the ramping time of the attached actuators or VSD.<br>2) Check connected actuators to determine if their torque rating is being exceeded (stuck damper or valve, etc...).<br>3) Check the two 12V fuses located under black covers on the right side of the LMV5.<br>4) Check the CANBus power supply (blue or black transformer) terminal SEK2. Pin 1 and pin 4 should have 12VAC to reference ground which is pin 2. Voltage between pin 1 and pin 4 should be 24VAC. |
| | 01..3F | | | The diagnostic value is made up of the following faults or their combinations (the individual diagnostic codes are added up in hexadecimal format) | |
| | 01 | Actuator / LMV5 | Fault Running Time Air Actuator | Running time fault of air actuator | |
| | 04 | | Fault Running Time Aux Actuator | Running time fault of auxiliary actuator 1 | |
| | 08 | | Fault Running Time Aux Actuator | Running time fault of auxiliary actuator 2 | |
| | 10 | VSD / LMV5 | Fault Running Time VSD | Running time fault of VSD | |
| | 20 | Actuator / LMV5 | Fault Running Time Aux Actuator | Running time fault of auxiliary actuator 3 | |
| 1E | Any # | Actuator / VSD | Special Pos not reached | Basic unit has detected that one or several actuators (incl. VSD module) has / have not reached the special position pertaining to the phase | 1) Check connected actuators to determine if their torque rating is being exceeded (stuck damper or valve, etc...).<br>2) Check the two 12V fuses located under black covers on the right side of the LMV5<br>3) Check the CANBus power supply (blue or black transformer) terminal SEK2. Pin 1 and pin 4 should have 12VAC to reference ground which is pin 2. Voltage between pin 1 and pin 4 should be 24VAC.<br>4) If a VSD is being used, check for filters, damping, and / or delays on the input signal to the VSD. The VSD should respond to the input signal in a linear fashion. See Error Code 15 for more information. |
| | 01..3F | Actuator / VSD | | The diagnostic value is made up of the following faults or their combinations (the individual diagnostic codes are added up in hexadecimal format) | |
| | 01 | Actuator | | Positioning fault of air actuator | |
| | 02 | | | Positioning fault of active fuel actuator | |
| | 04 | | | Positioning fault of auxiliary actuator 1 | |
| | 08 | | | Positioning fault of auxiliary actuator 2 | |
| | 10 | VSD Module | | VSD has not reached the speed | |
| | 20 | Actuator | | Positioning fault of auxiliary actuator 3 | |
| | 40 | VSD Module | | VSD quick shutdown, as the difference between the speed setpoint and the actual speed exceeds the value permitted in the ***TolQuick Shutdown*** parameter. | |

| Error Code | Diag. Code | Device | Display | Meaning for the LMV5x System | Corrective Action |
|---|---|---|---|---|---|
| | | | *Fault with VSD* | | |
| 1F | Any # | VSD Module | Code for VSD Module Fault | Basic unit has detected a fault in connection with the VSD module | If fault occurs sporadically, reduce electrical noise.<br>If fault occurs continuously, replace LMV5. |
| | 01 | | Speed Acquisition faulty | Internal VSD module test was not successful | |
| | 02 | | Wrong Direction of Rotation | Fan rotates in the wrong direction | 1) Check to see if the motor's direction of rotation is correct. Reverse if necessary<br>2) Check to see if the arrow on the speed wheel points in the correct direction of rotation. Reverse if necessary. |
| | 03 | | Speed Acquisition faulty | Pulse sequence and length at the speed input were different from those anticipated | 1) Check and or adjust the gap between the speed wheel and the sensor. The gap should be about 1/16" (2mm) or about two turns away from the speed wheel.<br>2) Check the wiring of the speed sensor. Ensure reference ground is connected. |
| | 04 | | Standardization canceled because of VSD | Fan was not able to keep the standardized speed at a constant level | |
| | 05 | | Standardization canceled because of Air Actuator | Air actuator (or other air influenced actuator) has not reached the prepurge position.<br>For this reason, speed standardization is not possible | 1) Check to see if all air-influencing actuators travel to the prepurge position and remain in that position for the VSD standardization.<br>2) Ensure torque requirements of air influencing dampers / valves is less than actuator output.<br>3) Verify that no air influencing damper / valve is bound.<br>4) Check the two 12V fuses located under black covers on the right side of the LMV5<br>5) Check the CANBus power supply (blue or black transformer) terminal SEK2. Pin 1 and pin 4 should have 12VAC to reference ground which is pin 2. Voltage between pin 1 and pin 4 should be 24VAC. |
| | 06 | | Speed Test was not successfully completed | Internal VSD module speed test was not successful | Set parameter ***Settling Time*** to 16.<br>If fault occurs sporadically, reduce electrical noise.<br>If fault occurs continuously, replace LMV5. |
| | 07 | | Safety loop open | Standardization not possible when safety loop is open | Check all switches wired into the safety loop circuit. This also includes the burner flange circuit. |
| | | | *Fault with devices or wiring connected to the Base Unit (LMV5)* | | |
| 21 | Any # | Devices conn. to LMV5 | Safety Loop open | Limit switches wired into the safety loop have opened (such as low low water or high Limit) | Check all switches wired into the safety loop circuit. This also includes the burner flange circuit. |
| 22 | Any # | | Internal Temp Limiter has responded | Internal temperature limiter has switched off because the value of parameter ***TL_Thresh_Off*** has been exceeded. | Check the burner / boiler temperature sensor located on terminal X60. |

| Error Code | Diag. Code | Device | Display | Meaning for the LMV5x System | Corrective Action |
|---|---|---|---|---|---|
| *Fault with devices or wiring connected to the Base Unit (LMV5)* | | | | | |
| 23 | Any # | LMV5 / Flame Detect. | Extraneous Light on Startup | Basic unit has detected extraneous light during startup | 1) Ensure that the source of extraneous light is not a flame. If it is a flame, take corrective action immediately.<br>2) If the QRI scanner is used, ambient light can cause an extraneous light error. Ensure sensor is viewing a dark area such as the inside of a boiler.<br>3) If the QRI scanner is used, check for glowing refractory. If glowing refractor is the cause, the afterburn time may need to be lengthened or a UV scanner may have to be used. |
| | 00 | | | | |
| | 01… 03 | | | Basic unit has detected extraneous light during startup<br>01 = QRI / QRB, 02 = ION / UV, 03 = any (LMV52 only) | |
| 24 | Any # | | Extraneous Light on Shutdown | Basic unit has detected extraneous light during shutdown | |
| | 00 | | | | |
| | 01… 03 | | | Basic unit has detected extraneous light during shutdown<br>01 = QRI / QRB, 02 = ION / UV, 03 = any (LMV52 only) | |
| 25 | Any # | LMV5 / Flame Detect. | No Flame at End of Safety Time | No flame detected at the end of safety time TSA1 or TSA2. | 1) With a piloted gas train, this means that the pliot did not light. Check wiring of ignition transformer and pilot valve.<br>2) Check manual shutoff valves for the pilot gas.<br>3) Check position of air damper. Close further if necessary. Pilot may be blowing out.<br>4) Check flame detector for signal in the presence of flame using a flame source. Replace if detector does not generate the anticipated signal. |
| | 00 | | | | |
| | 01… 03 | | | No flame detected at the end of safety time TSA1 or TSA2<br>01 = QRI / QRB, 02 = ION / UV, 03 = any (LMV52 only) | |
| 26 | Any # | | Loss of Flame | Loss of flame during normal operation (phase 60-62) | 1) Check flame detector for signal in the presence of flame using a flame source. Replace if detector does not generate the anticipated signal.<br>2) Check for flame signal "decay" as burner refractory heats up. If this happens, a UV scanner may be needed.<br>3) Increase setting of ***ReacTmeLossFlame*** . |
| | 00 | | | | |
| | 01… 03 | | | (LMV52 only) Loss of flame during normal operation<br>01 = QRI / QRB, 02 = ION / UV, 03 = any (LMV52 only) | |
| 27 | Any # | Devices conn. to LMV5 | Air Pressure on | Air pressure = on, but should have been off | 1) Make sure blower starts in phase 22 and shuts off in phase 78 or 83 (see sequence diagrams).<br>2) Check the setpoint on the air pressure switch. Raise setpoint if necessary. Switch should open after postpurge. |
| 28 | Any # | | Air Pressure off | Air pressure = off, but should have been on | |
| | 00 | | | | |
| | 01 | | | | The error message may be traced back to an open safety loop / burner flange. |

| Error Code | Diag. Code | Device | Display | Meaning for the LMV5x System | Corrective Action |
|---|---|---|---|---|---|
| *Fault with devices or wiring connected to the Base Unit (LMV5)* | | | | | |
| 29 | Any # | Devices conn. to LMV5 | Fan Contactor Contact is on | FCC signal = on, but should have been off | 1) If not using FCC, make sure parameter ***FGR-PS/FCC*** is not set to "FCC".<br>2) If an FCC fault occurs in phase 70, call a Siemens representative. A spark killer may be necessary. |
| 2A | Any # | | Fan Contactor Contact is off | FCC signal = off, but should have been on | |
| | 00 | | | | |
| | 01 | | | | The error message may be traced back to an open safety loop / burner flange. |
| 2B | Any # | | Flue Gas Recirculation Pressure Switch on | FGR-PS = on, but should have been off | 1) Check setpoint on FGR pressure switch. Adjust if necessary.<br>2) If a FGR-PS fault occurs in Phase 70, call a siemens representitve. A spark killer may be necessary. |
| 2C | Any # | | Flue Gas Recirculation Pressure Switch off | FGR-PS = off, but should have been on | |
| | 00 | | | | |
| | 01 | | | | The error message may be traced back to an open safety loop / burner flange. |
| 2D | Any # | | Valve not open | Closed Position Indicator (CPI) = on, but should have been off | 1) Check wiring to the fuel valves. With manual shutoff valves closed, ensure that the fuel valves are opening in the proper phase (see sequence diagrams).<br>2) Ensure CPI (POC) switches are opening when the valve opens. If this does not happen, check wiring, adjust switch, or replace fuel valve actuator. |
| | 00 | | | | |
| | 01 | | | CPI via terminal StartRelease_Gas Closed Position Indicator (CPI) = on, but should have been off | |
| 2E | Any # | | Valve or Closed Position Indicator (CPI) open | Closed Position Indicator (CPI) = off, but should have been on | 1) Check wiring to the fuel valves. Ensure fuel valves are wired to the correct terminal (see wiring diagram). With manual shutoff valves closed, ensure that the fuel valves are opening in the proper phase (see sequence diagrams).<br>2) Check wiring of the CPI (POC) switches. See wiring diagram. |
| | 00 | | | | |
| | 01 | | | CPI via terminal StartRelease_Gas Closed Position Indicator (CPI) = off, but should have been on | |
| 2F | Any # | | Gas Pressure has dropped below minimum Limit | Low gas pressure switch is open | 1) Check gas supply and / or manual shutoff valves.<br>2) Check setpoint and / or wiring of low gas pressure switch. |
| 30 | Any # | | Gas Pressure has exceeded maximum Limit | High gas pressure switch is open | 1) Check pressure regulators for ruptured diaphragms.<br>2) Check setpoint and / or wiring of high gas pressure switch. |

| Error Code | Diag. Code | Device | Display | Meaning for the LMV5x System | Corrective Action |
|---|---|---|---|---|---|
| *Fault with devices or wiring connected to the Base Unit (LMV5)* | | | | | |
| 31 | Any # | Devices conn. to LMV5 | Gas Pressure at Valve proving: Valve on Gas Side leaking | PS(M)-VP (Pressure Switch Valve Proving) has detected pressure between the gas valves during the atmospheric test. Switch opened when should have been closed. | 1) Bubble test gas valve to ensure that the upstream valve is not leaking. If leaking, replace valve.<br>2) Ensure that the setpoint of the PS(M)-VP is 50% of the pressure upstream of V1 (upstream valve). |
| 32 | | | No Gas Pressure Valve Proving: Valve on Burner Side leaking | PS(M)-VP (Pressure Switch Valve Proving) has detected the absence of pressure between the gas valves during the pressure test. Switch closed when should have been open. | 1) Bubble test gas valve to ensure that the downstream valve is not leaking. If leaking, replace valve.<br>2) Ensure that the setpoint of the PS(M)-VP is 50% of the pressure upstream of V1 (upstream valve). |
| 33 | | | Oil Pressure on although Oil Pump off | Low oil pressure switch is closed when oil pump is not running. | 1) Configure oil train so that low oil pressure switch is off when the oil pump is not running.<br>2) Check to ensure switch is wired Normally Open. |
| 34 | | | Oil Pressure below Minimum | Low oil pressure switch is open when oil pump is running. | 1) Ensure oil pressure exists at the switch when the oil pump is running. Adjust pressure reg. if needed.<br>2) Check to ensure switch is wired Normally Open. Check setpoint of switch. |
| 35 | | | Oil Pressure above Maximum | High oil pressure switch is open. | 1) Ensure excess oil pressure is not present at the switch. Adjust pressure reg. if needed.<br>2) Check to ensure switch is wired Normally Closed. Check setpoint of switch. |
| 36 | | | No Start Release for Oil | Switches wired to the start release oil terminal (typically the atomizing media PS) are not closed when anticipated. | 1) Check setpoint of switches.<br>2) Ensure switches are closing and opening at the correct times (see sequence diagram). |
| 37 | | | No direct Heavy Oil direct start | Switches wired to the direct start heavy oil terminal are not closed when anticipated. | |
| 38 | | | Lack of Gas Program | Shortage-of-gas program in progress. | 1) If repetition counter is enabled (outside North America), the LMV is waiting for gas pressure to return. |
| *Fault with Base Unit (LMV5)* | | | | | |
| 39 | Any # | LMV5 | Internal Fault Basic Unit | Parameter of max. safety time faulty | If fault occurs continuously, replace LMV5. |
| | 01 | | | Fault with timer1 | |
| | 02 | | | Fault with timer2 | |
| | 03 | | | Fault with timer3 | |
| 3A | Any # | | No Burner ID defined | No burner identification defined | Enter a unique burner Identification. Typically the burner SN. |
| 3B | Any # | | No Service Password defined | No service password defined | Enter a valid service password. |
| 3F | Any # | | Error-free | The LMV5 is error-free. | None |

| Error Code | Diag. Code | Device | Display | Meaning for the LMV5x System | Corrective Action |
|---|---|---|---|---|---|
| *Fault with Base Unit (LMV5)* | | | | | |
| 40 | Any # | LMV5 | Internal Fault Basic Unit | Wrong contact position of safety relay | If fault occurs sporadically, reduce electrical noise. If fault occurs continuously, replace LMV5. |
| 41 | Any # | | | Wrong contact position of ignition | Check wiring on igniton transformer. |
| 42 | Any # | | | Wrong contact position of a fuel valve relay | 1) Check to see if any source is feeding back voltage onto the output. If so, eliminate the voltage source. 2) Check for switches in the safety loop that are opening and closing again very quickly. This could be a pressure switch or a low water cut-out that is on the edge of opening and is "chattering". All outputs are powered through the safety loop, so the microprocessor that monitors the outputs can detect this, resulting in a fault. |
| | 01.. FF | | | The diagnostic value is made up of the following faults or their combinations (the individual diagnostic codes are added up in hexadecimal format) | |
| | 01 | | | Contact position fault safety valve (SV) oil | |
| | 02 | | | Contact position fault V1 oil | |
| | 04 | | | Contact position fault V2 oil | |
| | 08 | | | Contact position fault V3 oil | |
| | 10 | | | Contact position fault safety valve (SV) gas | |
| | 20 | | | Contact position fault V1 gas | |
| | 40 | | | Contact position fault V2 gas | |
| | 80 | | | Contact position fault pilot valve (PV) gas | |
| 43 | Any # | LMV5 | Internal Fault Basic Unit | Fault in connection with plausibility check. For cause of fault, refer to diagnostic code. | If fault occurs sporadically: reduce electrical noise. |
| | 01 | | | No fuel selection | Select a fuel externally (by energizing or de-energizing terminals) or select a fuel through the AZL. |
| | 02 | | No Fuel Train defined | No defined fuel train parameterized or undefined type of fuel | Select the proper fuel trains for gas and / or oil. See section on settings. |
| | 03 | | Internal Fault Basic Unit | Variable "Train" not defined | Select a fuel externally (by energizing or de-energizing terminals) or select a fuel through the AZL. |
| | 04 | | | Variable "Fuel" not defined | |
| | 05 | | | Operating mode with load controller not defined | |
| | 06 | | | Prepurge time gas too short | The time defined by ***PrepurgeTmeGas(Oil)*** is less than the time defined by parameter ***MinT_PrepurgeGas(Oil)***. Change so that ***PrepurgeTmeGas(Oil)*** is longer than ***MinT_PrepurgeGas(Oil)***. See section on settings. |
| | 07 | | | Prepurge time oil too short | |
| | 08 | | | Safety time 1 gas too long | The time defined by ***Max SafetyTGas(Oil)*** is less than the time defined by parameter ***SafetyTme1Gas(Oil)***. Increase ***Max SafetyTGas(Oil)*** or decrease ***SafetyTme1Gas(Oil)***. |
| | 09 | | | Safety time 1 oil too long | |
| | 0A | | | Ignition off time > TSA1 gas | If fault occurs sporadically, reduce electrical noise. |
| | 0B | | | Ignition off time > TSA1 oil | |

| Error Code | Diag. Code | Device | Display | Meaning for the LMV5x System | Corrective Action |
|---|---|---|---|---|---|
| *Fault with devices or wiring connected to the Base Unit (LMV5) / or Base Unit (LMV5)* | | | | | |
| 43 | 0C | LMV5 | Internal Fault Basic Unit | Safety time 2 gas too long | The time defined by ***Max SafetyTGas(Oil)*** is less than the time defined by parameter ***SafetyTme2Gas(Oil)***. Increase ***Max SafetyTGas(Oil)*** or decrease ***SafetyTme2Gas(Oil)***. |
| | 0D | | | Safety time 2 gas too long | |
| 44 | Any # | | - | Fault at deactivated inputs | Check inputs according to the diagnostic code. Disconnect wires or activate inputs for the specific application. Information concerning the configuration of the terminals can be found in the settings section. |
| | 01 | | Controller input connected but deactivated | Controller input (burner on / off switch) connected but deactivated, terminal X5-03.1 | |
| | 02 | | Air Press Switch connected but deactivated | APS connected but deactivated, terminal X3-02.1 | |
| | 03 | | FCC / FGR – APS connected but deactivated | FCC / FGR – PS connected but deactivated, terminal X4-01.3 | |
| | 04 | | Gas Pressure-MIN connected but deactivated | Low gas pressure switch connected but deactivated, terminal X9-03.4 | |
| | 05 | | Gas Pressure-MAX connected but deactivated | High gas pressure switch connected but deactivated, terminal X9-03.3 | |
| | 06 | | Oil Pressure min connected but deactivated | Low oil pressure switch connected but deactivated, terminal X5-01.2 | |
| | 07 | | Oil Pressure max connected but deactivated | High oil pressure switch connected but deactivated, terminal X5-02.2 | |
| | 08 | | Start Signal Oil connected but deactivated | Start release oil connected but deactivated, terminal X6-01.1 | |
| | 09 | | HO Start connected but deactivated | HO start connected but deactivated, terminal X6-01.3 | |
| | 0A | | Start Signal Gas connected but deactivated | Start release gas connected but deactivated, terminal X7-03.2 | |
| | 0B | | HO Start connected but deactivated | High-temperature flame safeguard connected but deactivated, terminal X6-01.3 | |

| Error Code | Diag. Code | Device | Display | Meaning for the LMV5x System | Corrective Action |
|---|---|---|---|---|---|
| *Fault with Base Unit (LMV5)* | | | | | |
| 45 | Any # | LMV5 | Locked by SLT | Shutdown via safety limit thermostat (SLT) test | SLT was activated and safety shutdown was triggered (usually by the safety loop opening) |
| 46 | Any # | | Programstop active | Program stop was activated. System has stopped at the parameterized position | Deactivate the program stop if no longer required. |
| | 01 | | | Program stop in phase 24 (driving to prepurge position) active. | |
| | 02 | | | Program stop in phase 32 (prepurge) active | |
| | 03 | | | Program stop in phase 36 (ignition position) active | |
| | 04 | | | Program stop in phase 44 (interval 1) active | |
| | 05 | | | Program stop in phase 52 (interval 2) active | |
| | 06 | | | Program stop in phase 72 (driving to postpurge position) active | |
| | 07 | | | Program stopin phase 76 (postpurge) active | |
| 47 | Any # | | No Start Release for Gas | Start release gas = off | Check the configuration of terminal X7-03.2. Deactivate terminal if not used. See settings section as a guide for configuration of the terminal. |
| 48 | Any # | | 2 Flame Signals with 1 Detector Operation | System parameterized for 1-detector operation but 2 flame signals present | Check flame detector wiring. If two detector operation is desired, configure the LMV52 for this type of operation. See settings section. |
| | 00 | | | Parallel operation with 2 flame detectors | |
| 49 | Any # | | 2 flame signals | 2 flame signals present on external flame safeguard | See corrective action based on diagnostic code. |
| | 01 | | | Parallel operation of external flame safeguard via contact and internal flame detector evaluation | When using an external flame safegaurd via terminal X6-01.3 (***HeavyOilDirStart*** = ext.FlameGd), there must not be a flame detector connected to the LMV5. |
| | 02 | | | Parallel operation of external high-temperature safeguard via contact and internal flame detector evaluation | When using a high-temperature safegaurd via terminal X6-01.3 (***HeavyOilDirStart*** = HTempGuard), only one flame detector may be connected to the LMV5 for low-temperature operation. |
| 50 | Any # | | Internal Fault Basic Unit | Fault during key value check | If fault occurs sporadically, reduce electrical noise. If fault occurs continuously, replace LMV5. |
| | 00..07 | | | Number of time block in which the fault was detected | |
| 51 | Any # | | | Time block overflow | |
| | 00..07 | | | Number of time block in which the fault was detected | |

| Error Code | Diag. Code | Device | Display | Meaning for the LMV5x System | Corrective Action |
|---|---|---|---|---|---|
| *Fault with Base Unit (LMV5)* | | | | | |
| 52 | Any # | LMV5 | Internal Fault Basic Unit | Stack error | If fault occurs sporadically, reduce electrical noise. If fault occurs continuously, replace LMV5. |
| | 01 | | | Stack overflow | |
| | 02 | | | Value dropped below preset minimum limit | |
| | 03 | | | Test values in stack range exceeded | |
| 53 | 01 | | | Faulty reset state has occurred | |
| 57 | Any # | | Invalid parameterization | Invalid parameter setting. | See corrective action based on diagnostic code. |
| | 00 | | | AND NOT ("& /") settings are not permitted in the gas extraneous light phases | Correct the setting for the ***SensExtralGas*** parameter. |
| | 01 | | | AND NOT ("& /") settings are not permitted in the oil extraneous light phases | Correct the setting for the ***SensExtralOil*** parameter. |
| | 02 | | | AND NOT ("& /") settings are not permitted in the gas pilot phases | Correct the setting for the ***SensPilotPhGas*** parameter. |
| | 03 | | | AND NOT ("& /") settings are not permitted in the oil pilot phases | Correct the setting for the ***SensPilotPhOil*** parameter. |
| | 04 | | | AND NOT ("& /") settings are not permitted in the gas operating phases | Correct the setting for the ***SensOperPhGas*** parameter. |
| | 05 | | | AND NOT ("& /") settings are not permitted in the oil operating phases | Correct the setting for the ***SensOperPhOil*** parameter. |
| | 06 | | | The temperature-compensated flue gas recirculation function is not permitted | This function is only enabled for the LMV52.4. Setting ***FGR-Mode*** to Temp.comp, TCautoDeact, deactMinpos, or auto deact. is not permitted. |
| | 07 | | | The high-temperature flame safeguard function is not permitted | This function is only enabled for the LMV50. Setting ***HeavyOilDirStart*** to "HTempGuard" is not permitted. |
| | 08 | | | The external flame safeguard function is not permitted | This function is only enabled for the LMV50 and LMV52. Setting ***HeavyOilDirStart*** to "ext.FlameGd" is not permitted. |
| | 09 | | | The flue gas recirculation function is not permitted | This function is only enabled for the LMV50, LMV51.3, and LMV52. Changing ***FGR-Mode*** from "deactivated" is not permitted. |
| | 0A | | | The VSD / auxiliary actuator 3 function is not permitted | This function is only enabled for the LMV50, LMV51.3, and LMV52. Setting ***AuxActuator*** to VSD and / or AUX3 is not permitted. |
| | 0B | | | The cooling in standby function is not permitted | This function is only enabled for the LMV50. Setting ***Config X5-03*** to "CoolfctStby" is not permitted. |
| | 0C | | | X5-03 double assignment: External load controller via contact (operating mode 1) / deactivation O2 and startup stop phase 36 | Adjust ***LC_OptgMode*** or ***Config X5-03*** to prevent the double assignment. |

| Error Code | Diag. Code | Device | Display | Meaning for the LMV5x System | Corrective Action |
|---|---|---|---|---|---|
| *Fault with Base Unit (LMV5)* | | | | | |
| 57 | 0D | LMV5 | Invalid parameterization | The redundancy contact monitoring function is not permitted | This function is only enabled for the LMV50 and LMV52. Setting ***StartReleaseOil*** to "HT/FG-RedCo" is not permitted. |
| | 0E | | | The COx function is not permitted. | This function is only enabled for the LMV50 and LMV52. Changing ***OptgMode COx Gas(Oil)*** from "deactivated" is not permitted. |
| 58 | Any # | | Parameter Set damaged | Internal communication (µC1 <> µC2) | 1) Reset the LMV5<br>2) If fault occurred after changing a parameter, check the parameters that were last changed.<br>3) Check for inductive loads on the outputs.<br>4) If fault cannot be rectified by the reset: Restore parameters form the AZL to the LMV5 |
| 59 | Any # | | | After initialization, EEPROM page is on ABORT (last parameterization was possibly interrupted due to a power failure) | |
| | | | | Page number | |
| 5A | Any # | | | CRC error of a parameter page | |
| | | | | Page number | |
| 5B | Any # | | | Page is on ABORT | |
| | | | | Page number | |
| 5C | Any # | | Parameter Backup Restore | Page is on WR_RESTO. A backup restore was made | Reset the LMV5 |
| | | | | Page number | |
| 5D | Any # | | Internal Fault Basic Unit | Page open too long | 1) Reset the LMV5<br>2) If fault occurred after changing a parameter, check the parameters that were last changed.<br>3) If fault cannot be rectified by the reset: Restore parameters form the AZL to the LMV5<br>4) If fault occurs continuously, replace LMV5. |
| | | | | Page number | |
| 5E | Any # | | | Page has an undefined status | |
| | | | | Page number | |
| 5F | Any # | | Parameter Set damaged | Last backup restore invalid (was interrupted) | Repeat parameter set download (from AZL to LMV5) |
| 60 | Any # | | Internal Fault Basic Unit | Fault when copying a parameter page | 1) Reset the LMV5<br>2) If fault occurred after changing a parameter, check the parameters that were last changed.<br>3) If fault cannot be rectified by the reset: Restore parameters form the AZL to the LMV5<br>4) If fault occurs continuously, replace LMV5. |
| | | | | Number of parameter page | |
| 61 | Any # | | | Fault in connection with EEPROM initialization | |
| | 01 | | | Fault during initialization of EEPROM | |
| | 02 | | | Number of write attempts exceeded | |
| | 10 | | | EEPROM was busy when accessed | |
| | 11 | | | Comparison of EEPROM and RAM area revealed dissimilarity | |
| | 12 | | | Page area of EEPROM exceeded during write process | |
| | 13 | | | Access conflict µC1 <> µC2 (arbitration) | |

| Error Code | Diag. Code | Device | Display | Meaning for the LMV5x System | Corrective Action |
|---|---|---|---|---|---|
| *Fault with Base Unit (LMV5)* | | | | | |
| 61 | 20 | LMV5 | Internal Fault Basic Unit | Fault when calling the "ParAccess()" function | 1) Reset the LMV5<br>2) If fault occurred after changing a parameter, check the parameters that were last changed.<br>3) If fault cannot be rectified by the reset: Restore parameters form the AZL to the LMV5<br>4) Replace the LMV5 |
| | 21 | | | Written EEPROM block unequal RAM block | |
| | 22 | | | CRC of page is faulty | |
| | 23 | | | Matching fault µC1, µC2 when saving the error page | |
| 63 | Any # | | No display of error (can only be read out via eBus) | Unit is error-free | None |
| 70 | Any # | | Internal Fault Basic Unit | Fault during restoring of lockout information | If fault occurs sporadically, reduce electrical noise.<br>If fault occurs continuously, replace LMV5. |
| | 01 | | | When reading from EEPROM (initialization) | |
| | 02 | | | When test writing in the initialization | |
| | 03 | | | No write access to error page in init. | |
| | 04 | | | Repetition counter "Internal fault" has elapsed | |
| 71 | Any # | | Manual Lockout | Lockout was made manually via contact | This lockout occurs when escape and enter on the AZL are pressed simultaneously. This lockout also occurs when the remote reset X4-01.4 is energized when an alarm condition does not exist. |
| 72 | Any # | | Internal Fault Basic Unit | Plausibility fault in connection with fault entry | If fault occurs sporadically, reduce electrical noise.<br>If fault occurs continuously, replace LMV5. |
| | 01 | | | Fault in "seterr()" | |
| | 02 | | | Fault in "seterr()" | |
| | 03 | | | Fault in "error_manager()" | |
| | 04 | | | Fault in "storeerr()" | |
| *Fault with Connected Actuators* | | | | | |
| 80 | Any # | Aux 3 Actuator | Fault Feedback Aux Actuator 3 | Basic unit has detected wrong state of the auxiliary 3 actuator | 1) This fault occurs when an un-addressed actuator is connected to the CANBus. Addressing the actuator should eliminate the fault.<br>2) Check CANBus cabling. Ensure that all cable shields (screens) which are located in the cable sheath are terminated correctly at each actuator, O2 module, and at the LMV5x...<br>3) Check each CANBus connector to ensure proper termination (no conductors exposed on the back of the plug)<br>4) If fault occurs sporadically: Reduce electrical noise.<br>5) If fault occurs constantly: Replace actuator according to diagnostic code. |
| | 01 | | | CRC error | |
| | 02 | | | Key error main loop counter | |
| | 03 | | | No feedback for max. number | |
| 81 | Any # | Air Actuator | Fault Feedback Air Actuator | Basic unit has detected wrong state of the air actuator | |
| | 01 | | | CRC error | |
| | 02 | | | Key error main loop counter | |
| | 03 | | | No feedback for max. number | |
| 82 | Any # | Gas (Oil) Actuator | Fault Feedback Gas (Oil) Actuator | Basic unit has detected wrong state of the gas actuator | |
| | 01 | | | CRC error | |
| | 02 | | | Key error main loop counter | |
| | 03 | | | No feedback for max. number | |

| Error Code | Diag. Code | Device | Display | Meaning for the LMV5x System | Corrective Action |
|---|---|---|---|---|---|
| *Fault with Connected Actuators* | | | | | |
| 83 | Any # | Oil Actuator | Fault Feedback Oil Actuator | Basic unit has detected wrong state of the oil actuator | 1) This fault occurs when an un-addressed actuator is connected to the CANBus. Addressing the actuator should eliminate the fault.<br>2) Check CANBus cabling. Ensure that all cable shields (screens) which are located in the cable sheath are terminated correctly at each actuator, O2 module, and at the LMV5x...<br>3) Check each CANBus connector to ensure proper termination (no conductors exposed on the back of the plug)<br>4) If fault occurs sporadically: Reduce electrical noise.<br>5) If fault occurs constantly: Replace actuator according to diagnostic code. |
| | 01 | | | CRC error | |
| | 02 | | | Key error main loop counter | |
| | 03 | | | No feedback for max. number | |
| 84 | Any # | Aux 1 Actuator | Fault Feedback Aux Actuator 1 | Basic unit has detected wrong state of the auxiliary 1 actuator | |
| | 01 | | | CRC error | |
| | 02 | | | Key error main loop counter | |
| | 03 | | | No feedback for max. number | |
| 85 | Any # | Aux 2 Actuator | Fault Feedback Aux Actuator 2 | Basic unit has detected wrong state of the auxiliary 2 actuator | |
| | 01 | | | CRC error | |
| | 02 | | | Key error main loop counter | |
| | 03 | | | No feedback for max. number | |
| *Fault with Base Unit (LMV5) or AZL5* | | | | | |
| 86 | Any # | LMV5 | Fault Feedback Load Controller | Basic unit has detected wrong state of the internal load controller | If fault occurs sporadically, reduce electrical noise.<br>If fault occurs continuously, replace LMV5. |
| | 01 | | | CRC error | |
| | 02 | | | Key error main loop counter | |
| | 03 | | | No feedback for max. number | |
| 87 | Any # | AZL5 | Fault Feedback AZL5 | Basic unit has detected wrong state of the AZL… | 1) Check CANBus cabling. Ensure that all cable shields (screens) which are located in the cable sheath are terminated correctly at each actuator, O2 module, and at the LMV5<br>2) Check each CANBus connector to ensure proper termination (no conductors exposed on the back of the plug)<br>3) If fault occurs sporadically: Reduce electrical noise.<br>4) If fault occurs constantly: Replace AZL5... |
| | 01 | | | CRC error | |
| | 02 | | | Key error main loop counter | |
| | 03 | | | No feedback for max. number | |
| 88 | Any # | All | | Plausibility fault NMT | If fault occurs sporadically, reduce electrical noise.<br>If fault occurs constantly, replace the defective unit (see diagnostic code) or the LMV5.<br><br>Note: The internal load controller and VSD module are part of the LMV5. |
| | 01 | Actuator | Fault Feedback Actuator | Undefined fault class of actuator | |
| | 02 | LMV5 | Fault Feedback Load Controller | Undefined fault class of load controller | |
| | 03 | AZL5 | Fault Feedback AZL | Undefined fault class of AZL5 | |
| | 04 | VSD module | Fault Feedback VSD Module | Undefined fault class of VSD module | |
| | 05 | O2 Mod. | Fault Feedback O2 Module | Undefined fault class of O2 module | |

| Error Code | Diag. Code | Device | Display | Meaning for the LMV5x System | Corrective Action |
|---|---|---|---|---|---|
| *Fault with Connected actuators* | | | | | |
| 90 | Any # | Aux 3 Actuator | Fault Feedback Aux Actuator 3 | Basic unit has detected a ROM-CRC error on the auxiliary 3 actuator when checking its feedback signal | 1) Check CANBus cabling. Ensure that all cable shields (screens) which are located in the cable sheath are terminated correctly at each actuator, O2 module, and at the LMV5x...<br>2) Check each CANBus connector to ensure proper termination (no conductors exposed on the back of the plug)<br>3) If fault occurs sporadically: Reduce electrical noise.<br>4) If fault occurs constantly: Replace actuator according to diagnostic code. |
| 91 | | Air Actuator | Fault Feedback Air Actuator | Basic unit has detected a ROM-CRC error on the air actuator when checking its feedback signal | |
| 92 | | Gas (Oil) Actuator | Fault Feedback Gas (Oil) Actuator | Basic unit has detected a ROM-CRC error on the gas actuator when checking its feedback signal | |
| 93 | | Oil Actuator | Fault Feedback Oil Actuator | Basic unit has detected a ROM-CRC error on the oil actuator when checking its feedback signal | |
| 94 | | Aux 1 Actuator | Fault Feedback Aux Actuator 1 | Basic unit has detected a ROM-CRC error on the auxiliary 1 actuator when checking its feedback signal | |
| 95 | | Aux 2 Actuator | Fault Feedback Aux Actuator 2 | Basic unit has detected a ROM-CRC error on the auxiliary 2 actuator when checking its feedback signal | |
| *Fault with Base Unit (LMV5), or AZL5* | | | | | |
| 96 | Any # | LMV5 | Fault Feedback Load Controller | Basic unit has detected a ROM-CRC error on the load controller when checking its feedback signal | 1) Check CANBus cabling. Ensure that all cable shields (screens) which are located in the cable sheath are terminated correctly at each actuator, O2 module, and at the LMV5x...<br>2) Check each CANBus connector to ensure proper termination (no conductors exposed on the back of the plug)<br>3) If fault occurs sporadically: Reduce electrical noise.<br>4) If fault occurs constantly: Replace actuator according to diagnostic code. |
| 97 | | AZL5 | Fault Feedback AZL | Basic unit has detected a ROM-CRC error on the AZL… when checking its feedback signal | |
| 98 | | All | Fault two equal Addresses | There are several components with the same address on the CAN bus (CAN overflow) | Check to see if two actuators are addressed identically. If so, erase the address on the incorrect actuator (hold red button down about 10 seconds) and re-address. |
| 99 | | | Internal Fault Basic Unit | CANBus OFF. A CANBus user (actuators, O2 module) switches the CANBus to OFF mode. | 1) Check CANBus cabling. Ensure that all cable shields (screens) which are located in the cable sheath are terminated correctly at each actuator, O2 module, and at the LMV5x...<br>2) Check each CANBus connector to ensure proper termination (no conductors exposed on the back of the plug)<br>3) If fault occurs sporadically: Reduce electrical noise.<br>4) If fault occurs constantly: Replace AZL.., LMV5 |
| 9A | | | | CAN warning level. Fault probably occurred when connecting or disconnecting a CANBus user | |
| 9B | Any # | | | Overflow of CAN queue | |
| | 01 | | | Overflow of RX queue | |
| | 02 | | | Overflow of TX queue | |

| Error Code | Diag. Code | Device | Display | Meaning for the LMV5x System | Corrective Action |
|---|---|---|---|---|---|
| *Fault with Connected Actuators* | | | | | |
| A0 | See diagnostic codes for A1 error codes. These diagnostic codes are identical, except they apply to the Auxiliary 3 Actuator. | | | | |
| A1 | Any # | Air Actuator | Internal Fault Air Actuator | Air actuator has detected own fault and reported it to the basic unit. Type of fault: See diagnostic code | 1) Check CANBus cabling. Ensure that all cable shields (screens) which are located in the cable sheath are terminated correctly at each actuator, O2 module, and at the LMV5x...<br>2) Check each CANBus connector to ensure proper termination (no conductors exposed on the back of the plug)<br>3) If fault occurs sporadically: Reduce electrical noise.<br>4) If fault occurs constantly: Replace air actuator |
| | 01 | | | CRC fault during ROM test | |
| | 02 | | | CRC fault during RAM test | |
| | 04 | | | Fault during key value check | |
| | 05 | | | Error code for time block overflow | |
| | 07 | | | Sync fault or CRC fault | |
| | 08 | | | Error code for main loop counter | |
| | 09 | | | Fault during stack test | |
| | 0C | | Overtemperature Air Actuator | Temperature warning and shutdown | Check the temperature of the air actuator. The max. temperature 140 °F. |
| | 0D | | Internal Fault Air Actuator | Actuator turns in the wrong direction | Verify that the air damper is not stuck. A stuck air damper will cause the actuator to trip on overcurrent. During this short trip the actuator can be momentarily pushed backwards by torsional effects. |
| | 0E | | Ramp time too short Air Actuator | Actuator operates with too short a ramp time, or with an angular rotation that is too long for the ramp time | 1) Match ramp time to the slowest connected actuator (SQM48.4 - 30 sec, SQM48.6 - 60sec, SQM9 - 30 sec)<br>2) Check the CANBus power supply. Verify fuses FU2 and FU3 are ok. Verify CANBus is not overloaded (see wiring section). |
| | 10 | | Internal Fault Air Actuator | Timeout during A/D conversion | 1) If fault occurs sporadically, reduce electrical noise.<br>2) If fault occurs constantly, replace air actuator. |
| | 11 | | | Fault during ADC test | |
| | 12 | | | Fault during A/D conversion | |
| | 13 | | Position Fault Air Actuator | Actuator is outside the valid angular rotation (0-90°) or linearization data are faulty | Check to see if actuator is within the valid positioning range (0-90°). When the actuator is not powered, it could be moved out of the valid positioning range. Take power off the actuator and position shaft back within the valid positioning range. |
| | 15 | | Internal Fault Air Actuator | CAN fault | 1) Check CANBus cabling. Ensure that all cable shields (screens) which are located in the cable sheath are terminated correctly at each actuator, O2 module, and at the LMV5x...<br>2) Check each CANBus connector to ensure proper termination (no conductors exposed on the back of the plug) |
| | 16 | | | CRC fault of a parameter page | |

| Error Code | Diag. Code | Device | Display | Meaning for the LMV5x System | Corrective Action |
|---|---|---|---|---|---|
| *Fault with Connected Actuators* | | | | | |
| A1 | 17 | Air Actuator | Internal Fault Air Actuator | Page too long open | 1) Reset the LMV5<br>2) If fault occurred after changing a parameter, check the parameters that were last changed.<br>3) If fault cannot be rectified by the reset: Restore parameters form the AZL to the LMV5<br>4) If fault occurs continuously, replace LMV5. |
| | 18 | | | Page disrupted | |
| | 19 | | | Invalid parameter access | |
| | 1B | | | Fault during copying of parameter page | |
| | 1E | | | External plausibility fault. This type of fault covers possible faults occurring due to invalid presettings in the drive commands. In response, the presettings will be ignored | 1) Check the paramters related to special positions. The special positions of each activated actuator should be programmed between 0 and 90 degrees. |
| | 1F | | | Internal plausibility fault. This type of fault covers possible faults that can occur due to strong electrical noise | 1) If fault occurs sporadically: Reduce electrical noise. |
| A2 | See diagnostic codes for A1 error codes. These diagnostic codes are identical, except they apply to the Gas (Oil) Actuator. | | | | |
| A3 | See diagnostic codes for A1 error codes. These diagnostic codes are identical, except they apply to the Oil Actuator. | | | | |
| A4 | See diagnostic codes for A1 error codes. These diagnostic codes are identical, except they apply to the Auxiliary 1 Actuator. | | | | |
| A5 | See diagnostic codes for A1 error codes. These diagnostic codes are identical, except they apply to the Auxiliary 2 Actuator. | | | | |
| *Fault with Base Unit (LMV5) Internal Load Controller* | | | | | |
| A6 | Any # | LMV5 Load Controller Module | - | Internal load controller has detected a fault. Type of fault: See diagnostic code | If fault occurs sporadically, reduce electrical noise.<br>If fault occurs continuously, replace LMV5. |
| | 10 | | No actual Value Slope at End of Identification | - | |
| | 12 | | Adaption invalid | Invalid XP identified | |
| | 13 | | | Invalid TN identified | |
| | 14 | | | TU longer than identification time | |
| | 15 | | | Invalid TV identified | |
| | 16 | | Timeout with Adaption | Timeout during observation time | PV (Process Varible) is not changing in response to firing rate during the adaption time. Adaption times out due to lack of change in the measured PV. Check sensor and thermal system. |
| | 17 | | Cold Start thermal Shock Protection active | A warning indicating that the Cold Start Thermal Shock Protection (CSTP) is activated | This can be deactivated, if desired. See parameters concerning the load controller in the settings section. |
| | 18 | | Timeout with Adaption | Timeout during delivery of adaption rate and while process is being watched | PV (Process Varible) is not changing in response to firing rate during the adaption time. Adaption times out due to lack of change in the measured PV. Check sensor and thermal system. |
| | 22 | | Setpoint Temp Controller above maximum Limit | The current setpoint (W1, W2, W3) is above the value of the internal temperature limiter. | Raise the value of the internal temperaure limiter or decrease the current setpoint. |

| Error Code | Diag. Code | Device | Display | Meaning for the LMV5x System | Corrective Action |
|---|---|---|---|---|---|
| *Fault with Base Unit (LMV5) Internal Load Controller* | | | | | |
| A6 | 30 | LMV5 Load Controller Module | Internal Fault Load Controller | EEPROM does not respond within the expected period of time | If fault occurs sporadically, reduce electrical noise. If fault occurs continuously, replace LMV5. |
| | 31 | | | Max. number of EEPROM attempts exceeded | |
| | 32 | | | Fault during opening of page | |
| | 33 | | Parameter Set damaged | Invalid CRC when reading a page | Reset the unit. Restore parameters from AZL to LMV5 if necessary. |
| | 34 | | Internal Fault Load Controller | Page cannot be set to FINISH | If fault occurs sporadically, reduce electrical noise. If fault occurs continuously, replace LMV5. |
| | 35 | | | No access to PID after identification | |
| | 36 | | | No access to PID Standard after identification | |
| | 37 | | | No reading of EEPROM at identification fault | |
| | 38 | | | No EEPROM write access for PID possible | |
| | 39 | | | No EEPROM write access for PID Standard possible | |
| | 3A | | | No access if reception via COM | |
| | 3B | | | Invalid page access | |
| | 40 | | | Page too long open | 1) Reset the LMV5<br>2) If fault occurred after changing a parameter, check the parameters that were last changed.<br>3) If fault cannot be rectified by the reset: Restore parameters from the AZL to the LMV5<br>4) If fault occurs continuously, replace LMV5. |
| | 41 | | | Invalid phase during parameterization of the safety-related page P_TW | If fault occurs sporadically, reduce electrical noise. If fault occurs continuously, replace LMV5. |
| | 42 | | | Invalid phase during parameterization of the safety-related page P_STATUS | |
| | 43 | | | Invalid phase during parameterization of the safety-related page P_SYSTEM | |
| | 44 | | Parameter Set damaged | Page has been set to ABORT | 1) Reset the LMV5<br>2) If fault occurred after changing a parameter, check the parameters that were last changed.<br>3) If fault cannot be rectified by the reset: Download parameters from the AZL to the LMV5<br>4) Replace the LMV5 |
| | 45 | | Parameter Backup Restore | Page has been set to RESTO | |
| | 46 | | Internal Fault Load Controller | Page has an invalid status | |
| | 4A | | | CAN error | If fault occurs sporadically, reduce electrical noise. If fault occurs continuously, replace LMV5. |
| | 4B | | | CAN error | |
| | 4C | | | CAN error | |
| | 4D | | | CAN error | |
| | 4E | | | CAN error | |

| Error Code | Diag. Code | Device | Display | Meaning for the LMV5x System | Corrective Action |
|---|---|---|---|---|---|
| *Fault with Sensors Connected to Internal Load Controller, in Base Unit (LMV5)* | | | | | |
| A6 | 50 | LMV5 Load Controller Module | Short-circuit Pt100 Sensor | Short-circuit sensor PT100, terminals X60.1, X60.4 | Check temperature sensors connected to X60 terminals. Check wiring and sensor. Check parameter ***Sensor Select.*** Re-wire or replace sensors if necessary. |
| | 51 | | Open-circuit Pt100 Sensor | Open-circuit sensor PT100, terminals X60.1, X60.4 | |
| | 52 | | Open-circuit Pt 100 Sensor (Line Compens) | Open-circuit compensation line of sensor PT100, terminals X60.2, X60.4 | |
| | 53 | | Short-circuit Pt1000 Sensor | Short-circuit sensor PT1000, terminals X60.3, X60.4 | |
| | 54 | | Open-circuit Pt1000 Sensor | Open-circuit sensor PT1000, terminals X60.3, X60.4 | |
| | 55 | | Short-circuit Ni1000 Sensor | Short-circuit sensor Ni1000, terminals X60.3, X60.4 | |
| | 56 | | Open-circuit Ni1000 Sensor | Open-circuit sensor Ni1000, terminals X60.3, X60.4 | |
| | 57 | | Overvoltage at Input 2 | Overvoltage at input 2, terminal X61 | 1) Check pressure sensors wired to X61. Check wiring and sensor. Check parameters ***Sensor Select*** and ***Ext Inp X61 U/I***. Re-wire or replace sensors if necessary. 2) If using a 4-20 mA pressure sensor, this fault occurs when the boiler pulls a vacuum. Replace with a 0-10 Vdc sensor, or a higher range 4-20mA sensor. |
| | 58 | | Open-circuit / Short-circuit at Input 2 | Open-circuit / short-circuit input 2, terminal X61 | |
| | 59 | | Overvoltage at Input 3 | Overvoltage at input 3, terminal X62 | 1) Check signals wired to X62. Check wiring. Check parameter ***Ext Inp X62 U/I***. Re-wire if necessary. |
| | 5A | | Open-circuit / Short-circuit at Input 3 | Open-circuit / short-circuit input 3, terminal X62 | |
| | 5B | | Output Value for Analog Output not available | Selected output value for analog output is not available in the current configuration | Ensure parameter ***OutValueSelection*** is a valid selection based on the devices connected to the basic unit. |
| | 5C | | Sensor already in use (LC, FGR, or temp. of the combustion air) | An invalid selection was made concerning the configuration of a temperature sensor. | Ensure the following five temperature sensor configuration parameters have valid selections based on the devices connected to the basic unit: ***Sensor Select***, ***FGR-sensor***, ***SupAirTempSens***, ***AirTempX60PT1000***, and ***FlueGasTempSens***. |

| Error Code | Diag. Code | Device | Display | Meaning for the LMV5x System | Corrective Action |
|---|---|---|---|---|---|
| *Fault with Base Unit (LMV5) Internal Load Controller* | | | | | |
| A6 | 60 | LMV5 Load Controller Module | Internal Fault Load Controller | Timeout during calibrate_ADC | If fault occurs sporadically, reduce electrical noise.<br>If fault occurs continuously, replace LMV5. |
| | 61 | | | Timeout during read_conversion | |
| | 62 | | | Timeout during calibrate_ADC | |
| | 63 | | | Fault during RedInv reading from A/D converter | |
| | 64 | | | Fault internal A/D converter | |
| | 65 | | | Gain register has been changed | |
| | 66 | | | Offset register has been changed | |
| | 67 | | | Too great / small gain for self-calibration of A/D converter | |
| | 68 | | | Too great / small offset for self-calibration of A/D converter | |
| | 69 | | | Fault internal A/D converter | |
| | 6A | | | Fault during PWM test | |
| | 6B | | | Faulty reference voltage | |
| | 6C | | | Fault transmitter power supply | |
| | 6D | | | Fault analog output, voltage deviation too great | |
| | 6E | | | Fault during resistance test PT100 input (X60) | |
| | 6F | | | Fault during diode test PT100 input | |
| *Fault with Sensors Connected to Internal Load Controller, in Base Unit (LMV5)* | | | | | |
| A6 | 70 | LMV5 Load Controller Module | Internal Fault Load Controller | Measured value varies too much: PT100 sensor (terminal X60) | 1) Check wiring and sensor. Re-wire or replace sensors if necessary.<br>2) Use shielded cable on sensor wiring.<br>3) Make sure that sensor wiring is not run next to high voltage AC wiring.<br>4) If the diagnostic code indicates excessive voltage, check input with meter. Trace voltage source. |
| | 71 | | | Measured value varies too much: PT100 line (terminal X60) | |
| | 72 | | | Measured value varies too much: PT1000 (terminal X60) | |
| | 73 | | | Measured value varies too much: PWM | |
| | 74 | | | Measured value varies too much: Voltage measurement input 2 (terminal X61) | |
| | 75 | | | Measured value varies too much: Current measurement input 2 (terminal X61) | |
| | 76 | | | Measured value varies too much: Voltage measurement input 3 (terminal X62) | |
| | 77 | | | Measured value varies too much: Current measurement input 3 (terminal X62) | |
| | 78 | | | Excessive voltage value or wrong polarity PT100 sensor (terminal X60) | |
| | 79 | | | Excessive voltage value or wrong polarity PT100 line (terminal X60) | |
| | 7A | | | Excessive voltage value or wrong polarity PT1000 (terminal X60) | |
| | 7B | | | Excessive voltage value or wrong polarity PWM | |
| | 7C | | | Excessive voltage value or wrong polarity voltage measurement input 2 (terminal X61) | |

| Error Code | Diag. Code | Device | Display | Meaning for the LMV5x System | Corrective Action |
|---|---|---|---|---|---|
| *Fault with Sensors Connected to Internal Load Controller, in Base Unit (LMV5)* | | | | | |
| A6 | 7D | LMV5 Load Controller Module | Internal Fault Load Controller | Excessive voltage value or wrong polarity current measurement input 2 (terminal X61) | 1) Check wiring and sensor. Re-wire or replace sensors if necessary.<br>2) Use shielded cable on sensor wiring.<br>3) Make sure that sensor wiring is not run next to high voltage AC wiring.<br>4) If the diagnostic code indicates excessive voltage, check input with meter. Trace voltage source. |
| | 7E | | | Excessive voltage value or wrong polarity voltage measurement input 3 (terminal X62) | |
| | 7F | | | Excessive voltage value or wrong polarity current measurement input 3 (terminal X62) | |
| A6 | 80 | LMV5 Load Controller Module | Internal Fault Load Controller | Fault during internal muliplexer test PT100 sensor | If fault occurs sporadically, reduce electrical noise.<br>If fault occurs continuously, replace LMV5. |
| | 81 | | | Fault during internal multiplexer test PT100 line | |
| | 82 | | | Fault during internal multiplexer test PT100 | |
| | 90 | | | Max. number of synchronization failures exceeded | |
| | 91 | | | Wrong CRC with synchronizations object | |
| | 92 | | | Wrong CRC with synchronizations object | |
| | 93 | | | Main loop counter does not agree with basic unit | |
| | 96 | | | Fault during multiplexer test | |
| | 97 | | | Paraccess with FINISH unsuccessful | |
| *Fault with Base Unit (LMV5) Internal Load Controller* | | | | | |
| A6 | 9B | LMV5 Load Controller Module | Internal Fault Load Controller | Fault PageAccess, invalid access status | If fault occurs sporadically, reduce electrical noise.<br>If fault occurs continuously, replace LMV5. |
| | 9C | | | Fault voltage monitor test | |
| | 9E | | | Fault during readout of PDO message | |
| | A0 | | | XP smaller than min. value | |
| | A1 | | | XP larger than max. value | |
| | A2 | | | TN smaller than min. value | |
| | A3 | | | TN larger than max. value | |
| | A4 | | | TV smaller than min. value | |
| | A5 | | | TV larger than max. value | |
| | A6 | | | Parameter outside the permissible range | |
| | A7 | | Inadmissible Selection aux Sensor Cold Start | Inadmissible selection of the auxiliary sensor | When using the auxiliary temperature sensor for cold start, a pressure sensor or temperature transmitter must be selected at input 2 (terminal X61) via parameter ***Sensor Select*** (PressSensor, TempSensor) |
| | B0 | | Internal Fault Load Controller | Red/Inv fault with float variables | If fault occurs sporadically, reduce electrical noise.<br>If fault occurs continuously, replace LMV5. |
| | B1 | | | Red/Inv fault of a Red/Inv variable | |
| | B2 | | | Fault during key value check | |
| | B4 | | | Fault in fault routine | |
| | B5 | | | Unplausible software interrupt | |

| Error Code | Diag. Code | Device | Display | Meaning for the LMV5x System | Corrective Action |
|---|---|---|---|---|---|
| *Fault with Base Unit (LMV5) Internal Load Controller* | | | | | |
| A6 | B6 | LMV5 Load Controller Module | Internal Fault Load Controller | Time block too long: Time block 0 | If fault occurs sporadically, reduce electrical noise.<br>If fault occurs continuously, replace LMV5. |
| | B7 | | | Time block too long: Time block 1 | |
| | B8 | | | Time block too long: Time block 2 | |
| | B9 | | | Time block too long: Time block 3 | |
| | BA | | | Time block too long: Time block 4 | |
| | BB | | | Time block too long: Time block 5 | |
| | BC | | | Time block too long: Time block 6 | |
| | BD | | | Time block too long: Time block 7 | |
| | C0 | | | CRC fault in page | |
| | E0 | | | Identpower | |
| | E1 | | | Controller parameter KP | |
| | E2 | | | Scanning time | |
| | EA | | | Invalid branch in EEPROM module() | |
| | EB | | | Invalid branch in EEPROM module() | |
| | EC | | | Invalid branch in EEPROM module() | |
| | ED | | | Invalid branch in EEPROM module() | |
| | EE | | | Invalid branch in EEPROM module() | |
| | EF | | | Invalid branch in EEPROM module() | |
| | F0 | | | Fault during ROM test | |
| | F1 | | | Fault during RAM test | |
| | F2 | | | Fault during RAM test, register bank 0 | |
| | F3 | | | Fault during RAM test, IDATA range | |
| | F4 | | | Fault during RAM test, XDATA range | |
| | F5 | | | Stack pointer does not point at stack | |
| | F6 | | | Stack overflow | |
| | FE | | | Fault messages in fault management | |
| | FF | | | Fault messages in fault management | |

| Error Code | Diag. Code | Device | Display | Meaning for the LMV5x System | Corrective Action |
|---|---|---|---|---|---|
| *Fault with AZL5...* | | | | | |
| A7 | Any # | AZL5 | Internal Fault AZL | AZL5…has detected own fault and reported it to the basic unit. Type of fault: see diagnostic code. | 1) Check CANBus cabling. Ensure that all cable shields (screens) which are located in the cable sheath are terminated correctly at each actuator, O2 module, and at the LMV5x...<br>2) Check each CANBus connector to ensure proper termination (no conductors exposed on the back of the plug)<br>3) If fault occurs sporadically: Reduce electrical noise.<br>4) If fault occurs constantly: Replace AZL5... |
| | 01 | | | CRC fault during ROM test | |
| | 02 | | | CRC fault during RAM test | |
| | 03 | | | Fault during stack test | |
| | 04 | | | Fault during key value check | |
| | 05 | | | Time block overflow | |
| | 07 | | | Sync fault or CRC fault | |
| | 08 | | | Fault main loop counter | |
| | 09 | | Manual Lockout AZL | Fault message for emergency off function via AZL… | This message is dispayed if escape and enter on the AZL are pressed simulaneously, causing a manual lockout. Can be reset normally. |
| | 0A | | Internal Fault AZL | Invalid AZL5… page | 1) If fault occurs sporadically: Reduce electrical noise.<br>2) If fault occurs constantly: Replace AZL5… |
| | 0B | | >250,000 startups, service required | 250,000 cycles have been exceeded. Internal parts in the LMV5.. are close to the end of their life. | Replace LMV5 |
| | 0C | | Internal Fault AZL | Save fault parameter | 1) If fault occurs sporadically: Reduce electrical noise.<br>2) If fault occurs constantly: Replace AZL5… |
| | 0D | | Menu for firing on oil. Current Fuel is Gas | Fuel changeover from oil to gas when an "oil only" menu is being viewed. | Escape out of current menu, or change the fuel that is selected. |
| | 0E | | Menu for firing on gas. Current Fuel is Oil | Fuel changeover from gas to oil when a "gas only" menu is being viewed. | |
| | 15 | | Internal Fault AZL | CAN queue fault | 1) If fault occurs sporadically: Reduce electrical noise.<br>2) If fault occurs constantly: Replace AZL5… |
| | 16 | | | CAN overflow fault | |
| | 17 | | | CANBus OFF. A CANBus user (actuators, O2 module) switches the CANBus to OFF mode. | 1) Check CANBus cabling. Ensure that all cable shields (screens) which are located in the cable sheath are terminated correctly at each actuator, O2 module, and at the LMV5x...<br>2) Check each CANBus connector to ensure proper termination (no conductors exposed on the back of the plug)<br>3) Check the wiring of the CANBus power supply (12 VAC transformer). Ensure that fuses FU2 and FU3 are not blown. Ensure that the CANBus power supply is not overloaded (too many actuators on CANBus) |

| Error Code | Diag. Code | Device | Display | Meaning for the LMV5x System | Corrective Action |
|---|---|---|---|---|---|
| *Fault with AZL5...* | | | | | |
| A7 | 18 | AZL5 | Internal Fault AZL | CAN warning level | 1) If fault occurs sporadically: Reduce electrical noise.<br>2) If fault occurs constantly: Replace AZL5… |
| | 1A | | | EEPROM fault | 1) If the error occurs in phase 22 together with a VSD, check the wiring of the VSD<br>2) If fault occurs sporadically: Reduce electrical noise.<br>3) If fault occurs constantly: Replace AZL5… |
| | 1B | | No valid Parameter Backup | Fault during copying of a parameter page | Back up LMV5 parameters to AZL. A prompt for this comes up when exiting the Params & Display menu. |
| | 1C | | Internal Fault AZL | Page in EEPROM was disrupted, has been restored | 1) If fault occurs sporadically: Reduce electrical noise.<br>2) If fault occurs constantly: Replace AZL5… |
| | 20 | | | Display fault | |
| | 22 | | | RTC is locked, permanently busy | |
| | 24 | | | Buffer for page copies too small | |
| | 28 | | | Time stamp could not be sent | |
| | 30 | | Fault Communication eBUS | Fault in connection with eBUS communication | Check wiring on RJ45 connector, located on the underside of the AZL5.. |
| | 38 | | Internal Fault AZL | Interface mode could not be terminated | Reset the unit. |
| | 40 | | Communication AZL with PC tool | Parameterization fault PC tool. Disclosed by key value check in AZL | Check cable between AZL and PC. A null modem adapter must be used on the 9 pin connector if the cable does not have this internally. A USB-to-serial adapter is OK to use when connecting the AZL to a laptop. |
| | 88 | | Internal Fault AZL | RAM fault with redundant inverse variables | 1) If fault occurs sporadically: Reduce electrical noise.<br>2) If fault occurs constantly: Replace AZL5… |
| | 89 | | | Program run fault, execution of program code that will probably never be executed | |
| | 8A | | | Unintentional watchdog reset | |

| Error Code | Diag. Code | Device | Display | Meaning for the LMV5x System | Corrective Action |
|---|---|---|---|---|---|
| *Fault with Base Unit (LMV5) VSD Module* | | | | | |
| A9 | Any # | VSD module | Internal Fault VSD Module | VSD module has detected own fault and reported it to the basic unit. Type of fault: see diagnostic code. | 1) If fault occurs sporadically, reduce electrical noise.<br>2) If fault occurs continuously, replace LMV5. |
| | 01 | | | CRC fault during ROM test | |
| | 02 | | | CRC fault during RAM test | |
| | 04 | | | Fault during key value check | |
| | 05 | | | Error code for time block overflow | |
| | 07 | | | Sync fault or CRC fault | |
| | 08 | | | Error code for main loop counter | |
| | 09 | | | Fault during stack test | |
| | 0A | | | Max IRQ speed reached | 1) Possibly interference on the line to the speed sensor, check cable routing, use shielded cable.<br>2) If fault occurs sporadically: Reduce electrical noise.<br>3) If fault occurs constantly: Replace LMV5 |
| | 0C | | Alarm from VSD | VSD reports a fault to the VSD module | 1) This indicates that a fault has been relayed to the LMV5 from the VSD via the VSD alarm input terminal. This indicates a fault in the VSD, not the LMV5. Thus, check the VSD error codes and take action based on those codes.<br>2) Check VSD settings (ramps, motor settings), increase ramp time on VSD and basic unit, if necessary.<br>3) Check motor and VSD for proper sizing. |
| | 0D | | Control Range Limitation VSD Module | VSD module could not offset speed differential within its control limits | 1) This indicates that the LMV5 has decreased its signal to the VSD as much as possible and the motor RPM is still too high. Increase VSD / LMV52 ramp times. Also increase VSD braking if possible.<br>2) Ensure the VSD and LMV5 are configured for the same analog signal (ex. 4-20 mA)<br>2) Re-standardize the speed. Ensure that the air damper is at purge position for the standardization (should do this automatically if the air damper is set to air-influencing)<br>3) Be sure to check combustion after the re-standardization. |

| Error Code | Diag. Code | Device | Display | Meaning for the LMV5x System | Corrective Action |
|---|---|---|---|---|---|
| *Fault with Base Unit (LMV5) VSD Module* | | | | | |
| A9 | 0E | VSD module | Internal Fault VSD Module | Fault during the speed calculation test | 1) If fault occurs sporadically, reduce electrical noise.<br>2) If fault occurs continuously, replace LMV5. |
| | 15 | | | CANBus fault, disturbed CANBus transmissions | 1) Check CANBus cabling. Ensure that all cable shields (screens) which are located in the cable sheath are terminated correctly at each actuator, O2 module, and at the LMV5x...<br>2) Check each CANBus connector to ensure proper termination (no conductors exposed on the back of the plug)<br>3) Check terminating resistors for correct position. |
| | 16 | | | CRC fault of a parameter page | 1) Reset the LMV5<br>2) If fault occurred after changing a parameter, check the parameters that were last changed.<br>3) If fault cannot be rectified by the reset: Restore parameters from the AZL to the LMV5<br>4) Replace the LMV5 |
| | 17 | | | Page too long open | |
| | 18 | | | Page disrupted | |
| | 19 | | | Invalid access to parameters | |
| | 1B | | | Fault when copying a parameter page | |
| | 1E | | | External plausibility fault. This type of fault covers possible faults occurring due to invalid presettings in the drive commands. In response, the presettings will be ignored. | Check the special positions for valid value range (0-100%) |
| | 1F | | | Internal plausibility fault. This type of fault detects faults that cannot practically occur. | 1) If fault occurs sporadically, reduce electrical noise.<br>2) If fault occurs continuously, replace LMV5. |
| *Fault with O2 Module (PLL5..)* | | | | | |
| AB | Any # | PLL5.. | Internal Fault O2 Module | The O2 module has detected own fault and reported it to the basic unit. Type of fault: see diagnostic code | 1) If fault occurs sporadically, reduce electrical noise.<br>2) If fault occurs continuously, replace PLL5.. |
| | 01 | | | CRC fault during ROM test | |
| | 02 | | | CRC fault during RAM test | |
| | 04 | | | Fault during key value check | |
| | 05 | | | Error code for time block overflow | |

| Error Code | Diag. Code | Device | Display | Meaning for the LMV5x System | Corrective Action |
|---|---|---|---|---|---|
| *Fault with O2 Module (PLL5..) or Oxygen Sensor (QGO2..)* | | | | | |
| AB | 07 | PLL5.. | Internal Fault O2 Module | Sync fault or CRC fault | 1) If fault occurs sporadically, reduce electrical noise.<br>2) If fault occurs continuously, replace PLL5.. |
| | 08 | | | Error code for main loop counter | |
| | 09 | | | Fault during stack test | |
| | 0A | | | Feedback values invalid | |
| | 10 | | Unplaus Value Nernst Voltage O2 Module | Nernst voltage outside the valid range | 1) Check the wiring between the O2 Module and the O2 sensor. Ensure high and low voltage are in seperate conduits.<br>2) Check the power supply to the O2 Module<br>3) Check fuse in the O2 Module<br>4) Check the heating control on the O2 Sensor<br>5) Check the temperature inside the O2 Sensor terminal box. Should be between -13 and 248° F<br>5) If fault occurs constantly, Replace O2 Sensor and / or Module. |
| | 12 | | Unplaus Value Thermocouple O2 Module | Thermocouple voltage outside the valid range | |
| | 13 | | Unplaus Value Compensation Element | Compensation element voltage outside the valid range | |
| | 15 | | Unplaus Value Flue Gas Temp O2 Module | Temperature of combustion air sensor outside the valid range (-20...+800 °C) | 1) Check the wiring between the O2 Module and the O2 sensor.<br>2) Check the ambient / flue gas temperature. Compare to valid range. |
| | 16 | | Unplaus Value Flue Gas Temp O2 Module | Temperature of flue gas sensor outside the valid range (-20...+800 °C) | |
| | 17 | | Internal Fault O2 Module | Fault during combustion air temperature sensor test | 1) Check the wiring between the O2 Module and the O2 sensor.<br>2) If fault occurs constantly, replace O2 Sensor and / or O2 Module |
| | 18 | | | Fault during thermocouple test | |
| | 19 | | | Fault during compensation element test | |
| | 1A | | | Fault during channel comparison of O2 signal | |
| | 1B | | | Fault ADC test voltages | |
| | 20 | | O2 Sensor Temp too low | Temperature of QGO measuring cell too low | 1) Check the temperature of heated sensor via parameter ***QGO SensorTemp.*** Minimum operating termperature is 1202 °F, maximum 1382 °F. O2 sensor could take up to 20 minutes to reach temperature.<br>2) Ensure O2 sensor is installed properly (see mounting section) and that stack gas velocity is correct. Min = 3.2 ft / sec, max = 32 ft / sec.<br>3) Check the power supply to the O2 Module<br>4) Check fuse in the O2 Module |
| | 21 | | O2 Sensor Temp too high | Temperature of QGO measuring cell too high | |
| | 22 | | Internal Fault O2 Module | Fault during calculation test | If fault occurs constantly, replace O2 Sensor and / or O2 Module |

| Error Code | Diag. Code | Device | Display | Meaning for the LMV5x System | Corrective Action |
|---|---|---|---|---|---|
| *Fault with O2 Module (PLL5..) or Oxygen Sensor (QGO2..)* | | | | | |
| AB | 23 | PLL5.. | Unplaus Value Ri 02 Measuring Cell | Measured internal resistance of the QGO measuring cell is smaller than 5 Ohm or greater than 150 Ohm | 1) Check the wiring between the O2 Module and the O2 sensor.<br>2) O2 Sensor may have reached the end of its service life (check resistance through AZL - ***QGO Resistance***). If greater than 140 - 150 ohms, replace sensor. |
| | 24 | | Response Time O2 Measuring Cell too long | Measured response time of the QGO measuring cell exceeds 5 seconds<br><br>(completely electronic) | 1) Check mounting position / orientation of O2 sensor.<br>2) Check to see if O2 sensor is dirty. Do not blow out with compresed air when hot! Cool, then blow out with low pressure compressed air (less than 10 psi)<br>3) O2 Sensor may have reached the end of its service life (check resistance through AZL - ***QGO Resistance***). If greater than 140 -150 ohms, replace sensor. |
| | 25 | | O2 Sensor Test aborted by O2 Module | Fault occurred during O2 sensor test | Check (through the AZL - ***Normal Operation***) to see if the measured O2 value is fluctuating. |
| | 30 | | Internal Fault O2 Module | CAN fault | 1) If fault occurs sporadically, reduce electrical noise.<br>2) If fault occurs constantly, replace PLL5.. |
| | 31 | | | CRC fault of a parameter page | 1) Reset the LMV5<br>2) If fault occurred after changing a parameter, check the parameters that were last changed.<br>3) If fault cannot be rectified by the reset: Restore parameters from the AZL to the LMV5<br>4) Replace the LMV5 |
| | 32 | | | Page too long open | |
| | 33 | | | Page disrupted | |
| | 34 | | | Invalid access to parameters | |
| | 38 | | | Fault during copying of a parameter page | |
| | 3E | | | External plausibility fault. This type of fault covers possible faults occurring due to invalid presettings in the drive commands. In response, the presettings will be ignored. | |
| | 3F | | | Internal plausibility fault. This type of fault covers possible errors that cannot practically occur. | 1) If fault occurs sporadically, reduce electrical noise.<br>2) If fault occurs constantly, replace PLL5.. |
| *Fault with Base Unit (LMV5)* | | | | | |
| B0 | Any # | LMV5.. | Internal Fault Basic Unit | Fault during test of port outputs | 1) If fault occurs sporadically, reduce electrical noise.<br>2) If fault occurs continuously, replace LMV5. |
| | 01 | | | Fault when resetting the set outputs | |
| | 02 | | | Fault during ZR test | |
| B1 | 01 | | | Fault during short-circuit test between inputs and outputs | |

| Error Code | Diag. Code | Device | Display | Meaning for the LMV5x System | Corrective Action |
|---|---|---|---|---|---|
| *Fault with Base Unit (LMV5) or Oxygen Sensor (QGO2..)* | | | | | |
| B5 | Any # | LMV5.. | - | O2 monitor | 1) If fault occurs sporadically, reduce electrical noise.<br>2) If fault occurs continuously, replace LMV5. |
| | 01 | | Below O2 Min Value | O2 value has dropped below O2 min. value | 1) Check the %O2 between the O2 guard curve and the O2 setpoint curve. Increase the %O2 "gap" between these two curves at the load point where the fault is occurring.<br>2) Check for mechanical lash (slop) between actuators and dampers / valves. Also check dampers for worn bearings. Change to zero lash flexible couplings if necessary.<br>3) If necessary, adjust parameters ***O2ModOffset*** and / or ***O2CtrlThreshold*** |
| | 02 | | O2 Min Values undefined | Invalid O2 min. value | Set a point for the O2 min value curve (or O2 guard curve) for each point set up on the ratio control curve (12 points on ratio control curve = 12 points on O2 min value curve) |
| | 03 | | O2 Setpoints undefined | Invalid O2 setpoint | Set a point for the O2 setpoint curve (or O2 Control Curve) for each point set up on the ratio control curve except for point 1 (12 points on ratio control = 11 points on O2 setpoint curve) |
| | 04 | | O2 Delay Time undefined | Invalid O2 delay time | The delay time has not been measured successfully at Point 2 or the highest curve point. See O2 trim section for possible causes. |
| | 05 | | Actual O2 Value invalid | No valid actual O2 value in operation for ≥ 3 s | 1) Check the wiring between the O2 Module and the O2 sensor.<br>2) Check the power supply to the O2 Module |
| | 06 | | O2 Value Prepurging not reached | During prepurging, the parameterized air oxygen content of +/- 2 % was not reached | 1) Check the parameter ***O2 Content Air***. This %O2 must be reached within +/- 2% during prepurge.<br>2) Check prepurge time. The time that is set may not be long enough to completely purge the boiler.<br>3) Sensor may be dirty. Do not blow out with compressed air when hot! Cool, then blow out with low pressure compressed air (less than 15 psi).<br>4) O2 Sensor may have reached the end of its service life (check resistance through AZL - ***QGO Resistance***) If greater than 140 -150 ohms, replace sensor. |

| Error Code | Diag. Code | Device | Display | Meaning for the LMV5x System | Corrective Action |
|---|---|---|---|---|---|
| *Fault with Base Unit (LMV5) or Oxygen Sensor (QGO2..)* | | | | | |
| B5 | 07 | LMV5.. | O2 Value in Operation too high | ***O2 MaxValue*** or ***O2 MaxCurve*** was exceeded | 1) Check mounting of O2 sensor. Ensure no air is entering the stack upstream of the sensor.<br>2) Verify that the O2 level in the stack has not exceeded the maximum value set by ***O2 MaxValue*** or the O2 value of the ratio control curve. |
| | 08 | | O2 - Parameter points of curve undefined | The curves for minimum / maximum O2 values are incomplete or no adaption has yet been carried out to determine the Tau values | 1) Check O2 min (guard) curve to ensure all points have a value.<br>2) If parameter ***Type O2 MaxValue*** is set for O2 MaxCurve, ensure all points on ratio control curve have a valid O2 value. |
| | 09 | | Testing period for minimum O2 values not defined | No value has been specified for the testing period (parameter ***Time O2 Alarm)*** | Enter a valid value for parameter ***Time O2 Alarm*** |
| | 0A | | Internal Fault Basic Unit | - | 1) If fault occurs sporadically, reduce electrical noise.<br>2) If fault occurs continuously, replace LMV5. |
| BA | 01 | | O2 Sensor Test aborted | O2 sensor test was not successful. E.g. reset of O2 module during probe test | 1) If fault occurs sporadically, reduce electrical noise.<br>2) If fault occurs continuously, replace PLL5.. |
| BB | 00 | | Service interval reached for O2 sensor test | The O2 trim control is removed and the system moves along the set ratio control curves | Fault occurs because the time set in parameter ***O2SensServTim*** has elapsed. Carry out maintenance or replace O2 sensor. |
| BE | Any # | | | Invalid parameterization of O2 operating mode / flue gas recirculation sensor / COx monitoring | Set O2 mode (***OptgMode***) to O2 Alarm or O2 Control, or set flue gas recirculation temp sensor (***FGR-sensor***) to X60 |
| BE | 00 | | O2 mode with FGR is not possible with selected temp. sensor | An error occurred in connection with the O2 trim control / O2 alarm and flue gas recirculation functionality | |
| BF | Any # | | O2 trim control automatically deactivated | Fault occurred in connection with O2 trim control or with the O2 monitor. It led to automatic deactivation of O2 trim control or the O2 monitor | See previous error code in fault history (typically B5 error codes). This will detail the reason for the automatic deactivation. |

| Error Code | Diag. Code | Device | Display | Meaning for the LMV5x System | Corrective Action |
|---|---|---|---|---|---|
| *Fault with Base Unit (LMV5) or Connected Components* | | | | | |
| C5 | Any # | Any | Version Conflict | When comparing the versions of the individual units, the AZL5 has detected old versions | Before replacing any units, start the system and wait about 1 minute (until, after entering the parameter level, the display “Parameters will be updated“ disappears). Then, reset the unit. Replace the unit only if the fault message does not disappear. Replace the relevant units by new versions |
| | 01..2F | | | The diagnostic value is made up of the following faults or their combinations (the individual diagnostic codes are added up in hexadecimal format) | Replace the unit(s) called out in the diagnostic code. Be sure that the new unit has up-to-date software. |
| | 01 | LMV5 | | Software of the basic unit too old | |
| | 02 | | | Software of the load controller too old | |
| | 04 | AZL5 | | Software of the AZL5 too old | |
| | 08 | Actuator | | Software of 1 or several actuators too old | |
| | 10 | LMV5 | | Software of VSD module too old | |
| | 20 | PLL5 | | Software of O2 module too old | |
| D1 | Any # | LMV5 | Fault Feedback VSD Module | Basic unit has detected a wrong state of the VSD module. Corresponds to the "8x"-faults with the other CAN users | 1) If fault occurs sporadically: Reduce electrical noise.<br>2) If fault occurs constantly: Replace LMV5<br>3) Check CANBus cabling. Ensure that all cable shields (screens) which are located in the cable sheath are terminated correctly at each actuator, O2 module, and at the LMV5x...<br>4) Check each CANBus connector to ensure proper termination (no conductors exposed on the back of the plug) |
| | 01 | | | CRC error | |
| | 02 | | | Key error main loop counter | |
| | 03 | | | No feedback for max. number | |
| D3 | Any # | PLL5 | Fault Feedback O2 Module | Basic unit has detected a wrong stage of the O2 module | |
| | 01 | | | CRC error | |
| | 02 | | | Key error main loop counter | |
| | 03 | | | No feedback for max. number | |
| E1 | Any # | LMV5 | Fault Feedback VSD Module | Basic unit has detected a ROM-CRC fault in the VSD module when checking its feedback signal | 1) If fault occurs sporadically: Reduce electrical noise.<br>2) If fault occurs constantly: Replace LMV5 |
| E3 | Any # | PLL5 | Fault Feedback O2 Module | Basic unit has detected a ROM-CRC fault in the O2 module when checking its feedback signal | |

| Error Code | Diag. Code | Device | Display | Meaning for the LMV5x System | Corrective Action |
|---|---|---|---|---|---|
| *Fault with Base Unit (LMV5) or Connected Components* | | | | | |
| F0 | Any # | LMV5 | Internal Fault Basic Unit | Plausibility fault during calculation of interpolation values | 1) If fault occurs sporadically: Reduce electrical noise.<br>2) If fault occurs constantly: Replace LMV5. |
| F1 | Any # | | Internal Fault Basic Unit | Internal fault during calculation of precontrol | 1) Check to make sure that all curves (Ratio control, O2 guard, and O2 control) are defined at every point in the firing range. If the ratio control curve has 12 points, the O2 guard must have 12 points, and the O2 trim must have 11 points. |
| | 01 | | | - | |
| | 02 | | | - | |
| | 03 | | | - | |
| | 04 | | | - | |
| | 05 | | | - | |
| | 06 | | | Internal fault calculation of precontrol. Undefined value in the curves used for the calculation | |
| | 07 | | | Internal fault calculation of precontrol. Undefined value for a type of fuel parameter | |
| F2 | Any # | | Internal Fault Basic Unit | Code for faulty temperature values from O2 module when calculating the air rate change | See diagnostic code. |
| | 07 | | | O2 module has delivered invalid value | If fault occurs constantly: Replace LMV5 |
| | 08 | | Flue Gas Temp too high | Flue gas temperature outside the permissible value range | Increase parameter ***MaxTempFlGasGas(Oil)*** or decrease flue gas temperature. |
| | 0A | | QGO in Heating-up Phase | QGO probe not yet sufficiently heated up | Check the temperature of the O2 Sensor via parameter ***QGO SensorTemp***. The sensor needs to be a minumum of 1202 °F to operate properly. Wait up to 20 minutes for sensor to reach operating termpeature. |

| Error Code | Diag. Code | Device | Display | Meaning for the LMV5x System | Corrective Action |
|---|---|---|---|---|---|
| *Fault with Base Unit (LMV5) or Connected Components* | | | | | |
| F3 | Any # | LMV5 | - | O2 trim control fault | See diagnostic code. |
| | 01 | | Missing or faulty Control Parameters | PID parameter for controller algorithm missing | Check the O2 trim PID control parameters. |
| | 02 | | Missing or faulty O2 controller manipulated variable limitation | The parameters for limiting the O2 controller manipulated variable have not yet been set | Check the parameters (***O2MinManVariable*** and ***O2MaxManVariable***) for limiting the O2 controller manipulated variable and reset if necessary. |
| | 03 | | O2 controller manipulated variable limitation | The O2 controller manipulated variable is limited | 1) Check the settings of the O2 trim control.<br>2) Check that the O2 sensor is installed correctly.<br>3) Check that the ***O2MaxManVariable*** and ***O2MinManVariable*** parameters are set correctly (especially when copying parameters from devices before software version 05.00 and 10.10). |
| | 04 | | O2 curves incomplete | Missing value in the O2 trim control curves | Check for missing values in the O2 control curve, O2 ratio control curve, or O2 minimum value curve. |
| | 05 | | Internal Fault Basic Unit | - | If fault occurs constantly: Replace LMV5 |
| | 06 | | Faulty set temperature or supply air temperature | There is no valid supply air temperature for initialization; there was no valid set temperature when the O2 trim control curves were set | For temp-compensated start modes (see parameter ***Startmode***), an ambient air temperature must be read during commissioning. Check parameter ***Adjust. Temp O2*** to see if a valid reading was taken. If not, use a non temp-compensated start mode or attach an ambient air sensor and recommission a point on the O2 control curve. |
| | 07 | | O2 controller operation locking time for QGO21 too short | The QGO21 requires a longer waiting time than the QGO20 when entering into operation. | Adjust parameter ***NumberTauSuspend*** to 40. |
| | 08 | | O2 value too high during O2 controller initialization | The O2 controller could not be initialized correctly after entering into operation because the O2 value was too high (greater than approx. 13%) | Check for an O2 sensor malfunction. Check for false air in the stack. Increase startup locking time (***NumberTauSuspend***). |

| Error Code | Diag. Code | Device | Display | Meaning for the LMV5x System | Corrective Action |
|---|---|---|---|---|---|
| *Fault with Base Unit (LMV5) or Connected Components* | | | | | |
| F4 | Any # | PLL5 | - | A fault occurred in the O2 module in connection with the flue gas recirculation | See diagnostic code. |
| | 01 | | Fault with Feedback from O2 Module | The flue gas temperature sensor PLL52… input X86 is selected, but no response is registered on the CAN | Check CANbus and main power wiring to the PLL5. |
| | 15 | | Implausible supply air temperature value | Temperature of supply air sensor on PLL52 input X87 is outside of the valid range (0 to 1472 °F) | Check wiring of the ambient air sensor connected to terminal X87. Check ambient air temperature. |
| | 16 | | Implausible flue gas temperature value | Value of flue gas temperature sensor on PLL52 input X87 is outside of the valid range (0 to 1472 °F) | Check wiring of the flue gas temperature sensor connected to terminal X86. Check flue gas temperature. |
| F5 | 01 | LMV5 | Fault with Feedback from Load Controller | The Pt1000/Ni1000 on the load controller input X60 is selected, but no response is registered on the CAN | Check CAN wiring. If fault occurs sporadically, reduce electrical noise. If fault occurs constantly, replace the defective unit. |
| F6 | Any # | | - | A fault occurred in connection with the flue gas recirculation function | See diagnostic code. |
| | 01 | | Flue gas recirculation automatically deactivated | The flue gas recirculation function was automatically deactivated | Check the fault history for the error that happened just before fault F6 for the cause of the automatic deactivation. |
| | 02 | | Invalid parameterization of flue gas recirculation operating mode / flue gas recirculation sensor | Invalid parameterization of flue gas recirculation operating mode / flue gas recirculation sensor in connection with O2 controller / O2 alarm | Set flue gas recirculation operating mode (***FGR-Mode***) from TCautoDeact to Temp.comp, or set flue gas recirculation temperature (***FGR-sensor***) to X60 |

| | |
|---|---|
| Section 1 | Overview |
| Section 2 | Wiring |
| Section 3 | Parameters |
| Section 4 | Commissioning |
| Section 5 | VSD |
| Section 6 | $O_2$ Trim |
| Section 7 | Troubleshooting |
| **Section 8** | **Modbus** |
| Section 9 | ACS450 |
| Section 10 | Revision History |
| Appendix A | Application Guide |
| Appendix B* | Complimentary Products Guide |


*Can be found at www.scccombustion.com.

HOME

| | |
|---|---|
| Section 1 | Overview |
| Section 2 | Wiring |
| Section 3 | Parameters |
| Section 4 | Commissioning |
| Section 5 | VSD |
| Section 6 | $O_2$ Trim |
| Section 7 | Troubleshooting |
| **Section 8** | **Modbus** |
| Section 9 | ACS450 |
| Section 10 | Revision History |
| Appendix A | Application Guide |
| Appendix B* | Complimentary Products Guide |


*Can be found at www.scccombustion.com.

HOME

# 8-1: Modbus

### Master-slave principle

Communication between Modbus users takes place according to the master-slave principle. The AZL5 always works as a slave.

### Data Transmission

### Transmission mode (RTU)

– The transmission mode used is RTU (Remote Terminal Unit)
– Data is transmitted in a binary format (hexadecimal) with 8 bits
– The LSB (least significant bit) is transmitted first
– ASCII operating mode is not supported

### Structure of data blocks

All data blocks use the same structure with the following four fields:

| Slave Address | Function Code | Data Field | Checksum CRC16 |
|---|---|---|---|
| 1 byte | 1 byte | x byte | 2 bytes |

**Slave Address** Device address of a certain slave

**Function Code** Function selection (reading / writing words)

**Data Field** Contains the following information:
- Word address
- Number of words
- Word value

**Checksum** Identification of transmission errors

### Checksum (CRC16)

The checksum (CRC16) is used to detect transmission errors. If, during evaluation, an error is detected, the relevant device will not respond.

Calculation scheme

```
CRC = 0xFFFF
    CRC = CRC XOR ByteOfMessage
    For (1 through 8)
        CRC = SHR (CRC)
        if (flag shifted at right = 1)
        then                    | else
        CRC = CRC XOR 0xA001    |
while (not all ByteOfMessage handled)
```

☞ The low-byte of the checksum is transmitted first.

Example

Data query: Reading 2 words from address 6 (CRC16 = 0x24A0)

| 0B | 03 | 00 | 06 | 00 | 02 | A0 | 24 |
|---|---|---|---|---|---|---|---|
| | | | | | | CRC16 | |

Reply: (CRC16 = 0x0561)

| 0B | 03 | 04 | 00 | 00 | 42 | C8 | 61 | 05 |
|---|---|---|---|---|---|---|---|---|
| | | | Word 1 | | Word 2 | | CRC16 | |

## Mapping Words

| B0 | B1 | B2 | B3 | B4 | B5 | B6 | B7 |
|---|---|---|---|---|---|---|---|
| Byte High | | | | | | | |

| B8 | B9 | B10 | B11 | B12 | B13 | B14 | B15 |
|---|---|---|---|---|---|---|---|
| Byte Low | | | | | | | |

Transmission mode: The LSB (least significant bit) is transmitted first.

## Mapping Long Values

| Byte High | Byte Low | Byte High | Byte Low |
|---|---|---|---|
| Word Low | | Word High | |

## Communication Process

Start and end of a data block are characterized by transmission pauses. The maximum permissible time between two successive characters is 3.5 times the time required for the transmission of one character. The character transmission time is dependent on the Baud rate and the data format used.

Having a data format of 8 data bits, no parity bit and one stop, the character transmission time is calculated as follows:

**Character transmission time [ms] = 1000 * 9 bits / Baud rate**

And with other data formats:

**Character transmission time [ms] = 1000 * 10 bits / Baud rate**

Process

| |
|---|
| **Data query from the master**<br>Transmission time = n characters * 1000 * x bits / Baud rate |
| Marking for end of data query<br>3.5 characters * 1000 * x bits / Baud rate |
| Data query handling by the slave |
| **Reply of slave**<br>Transmission time = n characters * 1000 * x bits / Baud rate |
| Marking for end of reply<br>3.5 characters * 1000 * x bits / Baud rate |

Example Marking for data query or end of reply with data format 10 / 9 bits

Waiting time = 3.5 characters * 1000 * x bits / Baud rate

| **Baud rate** [Baud] | **Data format** [bit] | **Waiting time** [ms] |
|---|---|---|
| 9600 | 10 | 3.125 |
| | 9 | 2.813 |

## Data query process

Time diagram A data query is made according to the following time diagram:

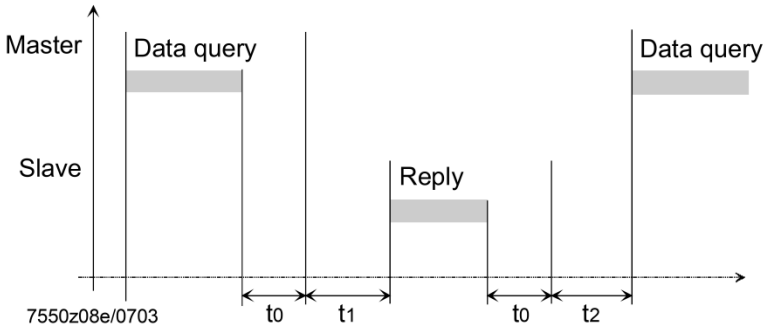


where:

t0 Marking for end = 3.5 characters (time is dependent on the Baud rate)

t1 This time is dependent on internal handling; the maximum handling time is dependent on the data type (internal and external data) and on the number of data; for more detailed information, see below!

t2 $t2 \geq 20$ ms
This time is required by the device to switch from transmitting back to receiving; this time must be observed by the master before a new data query is made; it must always be observed, even if a new data query to some other device is made

## Communication during the slave's internal handling time

During the slave's internal handling time, the master is not allowed to make any data queries. The slave ignores data queries made during this period of time.

## Communication during the slave's reply time

During the slave's reply time, the master is not allowed to make any data queries. Data queries made during this period of time cause all data on the bus at this instant to be deleted.

## Number of messages

The number of addresses per message is limited:

- 20 addresses of the size of one word when reading
- 6 addresses of the size of one word when writing
- For lockout history, messages must be exactly 16 addresses
- For error history, messages must be exactly 8 or 16 addresses

## Reply time of AZL... to a message from the master

1. Reading data from the LMV5... system:

| | |
|---|---|
| 1...3 addresses | 25...75 ms |
| 4...9 addresses | 75...125 ms |
| 10...15 addresses | 125...175 ms |
| 16...20 addresses | 175...225 ms |

These periods of time are defined from the complete writing of the message from the master to sending the first byte by the AZL...

2. Writing data to the LMV5... system:

| | |
|---|---|
| 1 address | 25...75 ms |
| 2...3 addresses | 75...125 ms |
| 4...5 addresses | 125...175 ms |
| 6 addresses | 175...225 ms |

## Modbus functions

The following Modbus functions are supported:

| **Function number** | **Function** |
|---|---|
| 03 / 04 | Reading n words |
| 06 | Writing 1 word |
| 16 | Writing n words |

For more information about the Modbus protocol, refer to www.modbus.org.

## Table of addresses

| Function | Address | Number of words | Data designation | Access | Data format | Data type / coding | Range | Updating rate |
|---|---|---|---|---|---|---|---|---|
| 03/04 | 0 | 1 | Phase | R | U16 | | 0...255 | Fast |
| 03/04 | 1 | 1 | Position of currently active fuel actuator | R | S16 | Degrees | -3... 93° | Fast |
| 03/04 | 2 | 1 | Position of gas actuator | R | S16 | Degrees | -3...93° | Fast |
| 03/04 | 3 | 1 | Position of oil actuator | R | S16 | Degrees | -3...93° | Fast |
| 03/04 | 4 | 1 | Position of air actuator | R | S16 | Degrees | -3...93° | Fast |
| 03/04 | 5 | 1 | Position of auxiliary actuator 1 | R | S16 | Degrees | -3...93° | Fast |
| 03/04 | 6 | 1 | Position of auxiliary actuator 2 | R | S16 | Degrees | -3...93° | Fast |
| 03/04 | 7 | 1 | Position of auxiliary actuator 3 | R | S16 | Degrees | -3...93° | Fast |
| 03/04 | 8 | 1 | Manipulated variable for variable speed drive | R | S16 | Percent | 0…110 % | Fast |
| 03/04 | 9 | 1 | Current type of fuel | R | U16 | 0= Gas<br>1= Oil | 0...1 | Fast |
| 03/04 | 10 | 1 | Current output | R | U16 | Fire rate | 0…100 % | Fast |
| 03/04 | 11 | 1 | Current setpoint / temperature / pressure | R | U16 | Process units | | Medium |
| 03/04 | 12 | 1 | Actual value / temperature / pressure<br>Unit: See address 18 / 19 | R | U16 | Process units | 0…2000 °C<br>0…100 bar | Medium |
| 03/04 | 13 | 1 | Flame signal | R | U16 | Percent | 0…100 % | Medium |
| 03/04 | 14 | 1 | Current fuel throughput | R | U16 | 0..65534 | | Fast |
| 03/04 | 15 | 1 | Current O2 value (LMV52...) | R | U16 | Percent | 0…100 % | Fast |
| 03/04 | 16 | 1 | Volume unit of gas | R | U16 | 0= m³<br>1= ft³ | 0…1 | Slow |
| 03/04 | 17 | 1 | Volume unit of oil | R | U16 | 0= l<br>1= gal | 0…1 | Slow |
| 03/04 | 18 | 1 | Unit of temperature | R | U16 | 0= °C<br>1= °F | 0…1 | Slow |
| 03/04 | 19 | 1 | Unit of pressure | R | U16 | 0= bar<br>1= psi | 0…1 | Slow |
| 03/04 | 20 | 1 | Sensor selection | R | U16 | 0=Pt100<br>1=Pt1000<br>2=Ni1000<br>3=temp. sensor<br>4=press. sensor<br>5=Pt100Pt1000<br>6=Pt100Ni1000<br>7=no sensor | 0…7 | Slow |
| 03/04 | 21, 22 | 2 | Startup counter total | R | S32 | | 0…999999 | Slow |
| 03/04 | 23, 24 | 2 | Hours run counter | R | S32 | | 0…999999 | Slow |
| 03/04 | 25 | 1 | Current error: Error code | R | U16 | | 0...0x FF | Fast |
| 03/04 | 26 | 1 | Current error: Diagnostic code | R | U16 | | 0…0x FF | Fast |
| 03/04 | 27 | 1 | Current error: Error class | R | U16 | | 0...5 | Fast |
| 03/04 | 28 | 1 | Current error: Error phase | R | U16 | | 0...255 | Fast |
| 03/04 | 29 | 1 | Temperature limiter OFF threshold, in degrees Celsius / Fahrenheit<br>(in address 129: Temperature limiter switching differential ON) | R | U16 | | 0…2000 °C<br>32…3632 °F | Slow |
| 03/04 | 30 | 1 | Supply air temperature, in degrees Celsius / Fahrenheit (LMV52...) | R | U16 | | -100…+923 °C<br>-148..+1693 °F | Slow |
| 03/04 | 31 | 1 | Flue gas temperature, in degrees Celsius / Fahrenheit (LMV52...) | R | U16 | | -100...+923 °C<br>-148...+1693 °F | Slow |
| 03/04 | 32 | 1 | Combustion efficiency (LMV52...) | R | U16 | Percent | 0...200 % | Slow |

| Function | Address | Number of words | Data designation | Access | Data type / coding | Range | Updating rate |
|---|---|---|---|---|---|---|---|
| 03/04 | 35 | 1 | **Inputs (bits)** | R | U16 | - | Medium |

Coding: 0 → inactive 1 → active

| B15 | B14 | B13 | B12 | B11 | B10 | B9 | B8 | B7 | B6 | B5 | B4 | B3 | B2 | B1 | B0 |
|---|---|---|---|---|---|---|---|---|---|---|---|---|---|---|---|

| | | | |
|---|---|---|---|
| B8 | Safety loop | B0 | Controller ON/OFF |
| B9 | | B1 | Fan contactor contact |
| B10 | Pressure switch-min-gas | B2 | Fuel selection oil |
| B11 | Pressure switch-max-gas | B3 | Fuel selection gas |
| B12 | | B4 | |
| B13 | Air pressure switch | B5 | Pressure switch-max-oil |
| B14 | Start release oil | B6 | Pressure switch-min-oil |
| B15 | Heavy oil immediate start | B7 | Pressure switch – valve proving |

| Function | Address | Number of words | Data designation | Access | Data type / coding | Range | Updating rate |
|---|---|---|---|---|---|---|---|
| 03/04 | 37 | 1 | **Outputs (bits)** | R | U16 | - | Medium |

Coding: 0 → inactive 1 → active

| B15 | B14 | B13 | B12 | B11 | B10 | B9 | B8 | B7 | B6 | B5 | B4 | B3 | B2 | B1 | B0 |
|---|---|---|---|---|---|---|---|---|---|---|---|---|---|---|---|

| | | | |
|---|---|---|---|
| B8 | Fuel valve SV oil | B0 | Alarm |
| B9 | Fuel valve V1 oil | B1 | |
| B10 | Fuel valve V2 oil | B2 | |
| B11 | Fuel valve V3 oil | B3 | |
| B12 | Fuel valve SV gas | B4 | Ignition |
| B13 | Fuel valve V1 gas | B5 | Start signal / 3-way solenoid valve |
| B14 | Fuel valve V2 gas | B6 | Fan |
| B15 | Fuel valve PV gas | B7 | Oil pump / magnetic coupling |

| Function | Address | Number of words | Data designation | Access | Data format | Data type / coding | Range | Updating rate |
|---|---|---|---|---|---|---|---|---|
| R 03/04<br>W 06/16 | 38 | 1 | Program stop | R/W*<br>EEPROM | U16 | 0=deactivated<br>1=24 PrePurgP<br>2=32 PrePFGR<br>3=36 IgnitPos<br>4=44 Interv 1<br>5=52 Interv 2<br>6=72 PostPPos<br>7=76 PostPFGR | 0...7 | Slow |
| R 03/04<br>W 06/16 | 39 | 1 | Operating mode with load controller | R/W*<br>EEPROM | U16 | 0=ExtLC X5-03<br>1=IntLC<br>2=IntLC Bus<br>3=IntLC X62<br>4=ExtLC X62<br>5=ExtLC Bus | 0…5 | Slow |
| R 03/04 | 40 | 1 | Selection of manual or automatic operation | R | U16 | 0=automatic<br>1=burner on<br>2=burner off | 0…2 | Fast |
| R 03/04<br>W 06/16 | 41 | 1 | Modbus mode: Local / Remote | R/W | U16 | 0 = Local<br>1 = Remote | 0…1 | Slow |

| Function | Address | Number of words | Data designation | Access | Data format | Data type / coding | Range | Updating rate |
|---|---|---|---|---|---|---|---|---|
| R 03/04<br>W 06/16 | 42 | 1 | Modbus downtime:<br>Max. time with no communication. When this time has elapsed, automatic changeover from Remote to Local takes place | R/W*<br>EEPROM | U16 | | 0…7200 s | Slow |
| R 03/04<br>W 06/16 | 43 | 1 | Operating mode in Remote mode.<br>Auto, Remote ON, Remote OFF | R/W | U16 | 0 = Auto<br>1 = ON<br>2 = OFF | 0…2 | Fast |
| R 03/04<br>W 06/16 | 44 | 1 | External setpoint W3<br>Unit: See address 18 / 19 | R/W[2] | U16 | Process units | See ”Data types” on page 10 | Fast |
| R 03/04<br>W 06/16 | 45 | 1 | Predefined output mod. / multistage | R/W | U16 | Fire rate | See ”Data types” on page 10 | Fast |
| R 03/04<br>W 06/16 | 46 | 1 | Fuel selection AZL... | R/W*<br>EEPROM | U16 | 0 = Gas<br>1 = Oil | 0…1 | Slow |
| R 03/04<br>W 06/16 | 47 | 1 | Setpoint W1 | R/W[1, 2]<br>EEPROM | U16 | Process units | See ”Data types” on page 10 | Slow |
| R 03/04<br>W 06/16 | 48 | 1 | Setpoint W2 | R/W[1, 2]<br>EEPROM | U16 | Process units | See ”Data types” on page 10 | Slow |
| R 03/04<br>W 06/16 | 49 | 1 | Weekday | R/W | U16 | 0 = Sunday<br>1 = Monday<br>... | 0…6 | Slow |
| R 03/04<br>W 16 | 50-52 | 3 | Date | R/W | U16[3] | Data structure Date | | Slow |
| R 03/04<br>W 16 | 53-55 | 3 | Time of day | R/W | U16[3] | Data structure Time of day | | Slow |
| R 03/04<br>W 16 | 56, 57 | 2 | Hours run gas (adjustable to zero only) | R/W*<br>EEPROM | S32 | | 0...999999 h | Slow |
| R 03/04<br>W 16 | 58, 59 | 2 | Hours run oil stage 1 or modulating (adjustable to zero only) | R/W*<br>EEPROM | S32 | | 0...999999 h | Slow |
| R 03/04<br>W 16 | 60, 61 | 2 | Hours run oil stage 2 or modulating (adjustable to zero only) | R/W*<br>EEPROM | S32 | | 0...999999 h | Slow |
| R 03/04<br>W 16 | 62, 63 | 2 | Hours run oil stage 3 or modulating (adjustable to zero only) | R/W*<br>EEPROM | S32 | | 0...999999 h | Slow |
| R 03/04<br>W 16 | 64, 65 | 2 | Hours run total (adjustable to zero only) | R/W*<br>EEPROM | S32 | | 0...999999 h | Slow |
| 03/04 | 66, 67 | 2 | Hours run total (read only) | R | S32 | | 0...999999 h | Slow |
| 03/04 | 68, 69 | 2 | Hours run device connected to power (read only) | R | S32 | | 0...999999 h | Slow |
| R 03/04<br>W 16 | 70, 71 | 2 | Startup counter gas (adjustable to zero only) | R/W*<br>EEPROM | S32 | | 0...999999 | Slow |
| R 03/04<br>W 16 | 72, 73 | 2 | Startup counter oil (adjustable to zero only) | R/W*<br>EEPROM | S32 | | 0...999999 | Slow |
| R 03/04<br>W 16 | 74, 75 | 2 | Startup counter total (adjustable to zero only) | R/W*<br>EEPROM | S32 | | 0...999999 | Slow |
| 03/04 | 76, 77 | 2 | Startup counter total (read only) | R | S32 | | 0...999999 | Slow |
| 03/04 | 78, 79 | 2 | Fuel volume gas (read only)<br>(resettable from AZL5... version V4.10)<br>0…199999999.9 m³<br>0…1999999999 ft³ | R/W*<br>EEPROM | S32 | | See ”Data types” on page 10 | Slow |

1. Can only write to setpoint W1 or W2 if in mode “IntLC Bus”, otherwise it is ignored.
2. When in mode “IntLC Bus”, setpoints W1, W2, and W3 will be affected by parameters ***Ext MinSetpoint*** and ***Ext MaxSetpoint***.

| Function | Address | Number of words | Data designation | Access | Data format | Data type / coding | Range | Updating rate |
|---|---|---|---|---|---|---|---|---|
| 03/04 | 80, 81 | 2 | Fuel volume oil (read only)<br>(resettable from AZL5... version V4.10)<br>0…199999999.9 l<br>0…199999999.9 gal | R/W*<br>EEPROM | S32 | | See "Data types" on page 10 | Slow |
| 03/04 | 82 | 1 | Number of lockouts | R | U16 | | 0…65535 | Slow |
| 03/04 | 83 | 1 | Extra temperature sensor<br>(from AZL5... version V4.10 or later) | R | U16 | °C:<br>°F: | 0..2000 °C<br>32..3632 °F | Slow |
| **Parameters 84...137 are available on AZL5... version V4.20 or later** | | | | | | | | |
| 03/04 | 84-91 | 8 | AZL5... ASN | R | U8[16] | String | | Constant |
| 03/04 | 92 | 1 | AZL5... parameter set code | R | U16 | | | Constant |
| 03/04 | 93 | 1 | AZL5... parameter set version | R | U16 | | | Constant |
| 03/04 | 94-96 | 3 | AZL5... identification date | R | U16[3] | Date | | Constant |
| 03/04 | 97 | 1 | AZL5... identification number | R | U16 | | | Constant |
| 03/04 | 98-105 | 8 | Burner control ASN | R | U8[16] | String | | Constant |
| 03/04 | 106 | 1 | Burner control parameter set code | R | U16 | | | Constant |
| 03/04 | 107 | 1 | Burner control parameter set version | R | U16 | | | Constant |
| 03/04 | 108-110 | 3 | Burner control identification date | R | U16[3] | Date | | Constant |
| 03/04 | 111 | 1 | Burner control identification number | R | U16 | | | Constant |
| 03/04 | 112 | 1 | Software version AZL5... | R | U16 | Hexadecimal | | Constant |
| 03/04 | 113 | 1 | Software version burner control | R | U16 | Hexadecimal | | Constant |
| 03/04 | 114 | 1 | Software version load controller | R | U16 | Hexadecimal | | Constant |
| 03/04 | 115-122 | 8 | Burner identification | R | U8[16] | String | | Upon reset |
| 03/04 | 123 | 1 | Min-output gas | R | U16 | Fire rate | 0...100 % | Slow |
| 03/04 | 124 | 1 | Max-output gas | R | U16 | Fire rate | 0...100 % | Slow |
| 03/04 | 125 | 1 | Min-output oil | R | U16 | Fire rate | 0...100 %<br>1001...1003 | Slow |
| 03/04 | 126 | 1 | Max-output oil | R | U16 | Fire rate | 0...100 %<br>1001...1003 | Slow |
| R 03/04<br>W 16 | 127 | 1 | Load limitation enduser (modulating) | R/W*<br>EEPROM | U16 | Fire rate | 0...100 % | Slow |
| R 03/04<br>W 16 | 128 | 1 | Load limitation enduser (multistage) | R/W*<br>EEPROM | U16 | 0: S1<br>1: S2<br>2: S3 | 0...2 | Slow |
| 03/04 | 129 | 1 | Temperature limiter switching differential ON (in address 29: Temperature limiter OFF threshold, in degrees Celsius / Fahrenheit) | R | S16 | Percent | -50...0 % | Slow |
| 03/04 | 130 | 1 | Measuring range temperature sensor | R | U16 | 0: 150°C / 302°F<br>1: 400°C / 752°F<br>2: 850°C / 1562F | 0...2 | Slow |
| 03/04 | 131 | 1 | Adaption active / inactive | R | U16 | 0: Inactive<br>1: Active | 0...1 | Fast |
| 03/04 | 132 | 1 | Adaption state | R | U16 | Adaption list | 0...12 | Slow |
| R 03/04<br>W 16 | 133 | 1 | Start adaption | R/W | U16 | 0: Reset value<br>1: Start<br>2: Abort | 0...2 | Slow |
| R 03/04<br>W 16 | 134 | 1 | Adaption output<br>Permissible values: 40%, 50%, 60%, 70%, 80%, 90%, 100% | R/W*<br>EEPROM | U16 | Percent | 40...100 % | Slow |
| R 03/04<br>W 16 | 135 | 1 | P-value | R/W*<br>EEPROM | U16 | Percent | 2...500 % | Slow |
| R 03/04<br>W 16 | 136 | 1 | I-value | R/W*<br>EEPROM | U16 | Seconds | 0...2000 s | Slow |

| Function | Address | Number of words | Data designation | Access | Data format | Data type / coding | Range | Updating rate |
|---|---|---|---|---|---|---|---|---|
| R 03/04<br>W 16 | 137 | 1 | D-value | R/W*<br>EEPROM | U16 | Seconds | 0...1000 s | Slow |
| 03/04 | 400 | 16 | Lockout history (current lockout) | R | U16/U32 [] | | | Fast |
| 03/04 | 416 | 16 | Lockout history (current lockout -1) | R | U16/U32 [] | | | Fast |
| 03/04 | 432 | 16 | Lockout history (current lockout -2) | R | U16/U32 [] | | | Fast |
| : | : | : | : | : | : | | | |
| 03/04 | 528 | 16 | Lockout history (current lockout -8) | R | U16/U32 [] | | | Fast |
| 03/04 | 544 | 8 | Error history (current error) | R | U16/U32 [] | | | Fast |
| 03/04 | 552 | 8 | Error history (current error -1) | R | U16/U32 [] | | | Fast |
| : | : | : | : | : | : | | | |
| 03/04 | 704 | 8 | Error history (current error -20) | R | U16/U32 [] | | | Fast |

* These parameters do not need to be continually written since they are stored in EEPROM, which only permits a limited number of write accesses over its lifecycle (< 100,000).

## Data structures

| | | |
|---|---|---|
| Date | U16 | 1: Year<br>2: Month<br>3: Day |
| | | |
| Time of day | U16 | 1: Hour<br>2: Minute<br>3: Second |
| | | |
| Lockout history | U16 | 1: Error code<br>2: Error diagnostics<br>3: Error class<br>4: Error phase<br>5: Fuel<br>6: Output<br>7: Date - Year<br>8: Date - Month<br>9: Date - Day<br>10: Time of day - Hours<br>11: Time of day - Minutes<br>12: Time of day - Seconds |
| | U32 | 13, 14: Startup counter total<br>15, 16: Hours run total |
| | | |
| Error history | U16 | 1: Error code<br>2: Error diagnostics<br>3: Error class<br>4: Error phase<br>5: Fuel<br>6: Output |
| | U32 | 7, 8: Startup counter total |

## Legend to address table

| | | |
|---|---|---|
| Access | R | Value can only be read |
| | R / W | Value can be read and written |
| | | |
| Data format | S16 | 16 bit integer, subject to sign |
| | U16 | 16 bit integer, not subject to sign |
| | S32 | 32 bit integer, subject to sign<br>Note:<br>In the AZL..., this data type is also used to mark an invalid or non-available value by using the value of «-1» |
| | | |
| [ ] | | Data array |

* These parameters do not need to be continually written since they are stored in EEPROM, which only permits a limited number of write accesses over its lifecycle (< 100,000).

**Data types**

| TYPE | Phys. | Int. range | Resolution | Conversion int. / phys. |
|---|---|---|---|---|
| Percent | 0...100 % | 0...1000 | 0.1 % | / 10 |
| Percent | 0...110 % | 0...1100 | 0.1 % | / 10 |
| Degrees | -3.0...93.0° | -30...930 | 0.1° | / 10 |
| Process units | 0...2000°<br>32...3632 °F<br>0...100 bar<br>0...1449 psi | 0...2000<br>32...3632<br>0...1000<br>0...1449 | 1 °C<br>1 °F<br>0.1 bar<br>1 psi | 1<br>1<br>/ 10<br>1 |
| Fire rate | Modulating operation: 0...100 %<br>Multistage operation:<br>1001 = stage 1<br>1002 = stage 2<br>1003 = stage 3 | 0...1003 | Modulating operation:<br>0.1 %<br><br>Multistage operation:<br>1 | Modulating operation:<br>/ 10<br><br>Multistage operation:<br>- 1000 |
| Adaption list | 0: Undefined<br>1: Identification completed, parameter determined<br>2: Undefined<br>3: Adaption aborted by user<br>4: Temperature differential too small, temperature will be lowered with low-fire<br>5: Monitoring time running<br>6: Delivery of identification load set<br>7: Error during identification (path)<br>8: Error during identification (internally)<br>9: Monitoring time running<br>10: Changeover from modulating to multistage during an identification<br>11: Timeout monitoring time<br>12: Timeout heating output on path with monitoring | | | |

## Modbus Address / LMV5 Parameter Cross-Reference Guide

| Modbus Address | Description | LMV5 Parameter |
|---|---|---|
| 0 | Phase | See "Normal Operation" screen |
| 1 | Position of active fuel actuator | |
| 2 | Position of gas actuator | |
| 3 | Position of oil actuator | |
| 4 | Position of air actuator | |
| 5 | Position of aux 1 actuator | |
| 6 | Position of aux 2 actuator | |
| 7 | Position of aux 3 actuator | |
| 8 | Position of VSD | |
| 9 | Current fuel | |
| 10 | Current output | |
| 11 | Current setpoint | |
| 12 | Actual value | |
| 13 | Flame signal | ***FlameSig QRI_B*** |
| 14 | Current fuel throughput | ***Curr Flow Rate*** |
| 15 | Current O2 value | ***Current O2 Value*** |
| 16 | Gas volume unit | ***PulseValueGas*** |
| 17 | Oil volume unit | ***PulseValueOil*** |
| 18 | Unit of temperature | ***PhysicalUnits*** |
| 19 | Unit of pressure | ***PhysicalUnits*** |
| 20 | Sensor type | ***Sensor Select*** |
| 21, 22 | Startup counter total | ***TotalStartCount*** |
| 23, 24 | Hours run total | ***TotalHours*** |
| 25 | Current error: code | See "Status/Reset" screen |
| 26 | Current error: diagnostic | |
| 27 | Current error: class | |
| 28 | Current error: phase | |
| 29 | Temperature limiter off threshold | ***TL_ThreshOff*** |
| 30 | Supply air temperature | ***SupplyAirTemp*** |
| 31 | Flue gas temperature | ***FlueGasTemp*** |
| 32 | Combustion efficiency | ***CombEfficiency*** |
| 35 | Inputs (bits) | N/A |
| 37 | Outputs (bits) | N/A |
| 38 | Program stop | ***ProgramStop*** |
| 39 | Load controller operating mode | ***LC_OptgMode*** |
| 40 | Manual / automatic operation | ***Autom/Manual/Off*** |
| 41 | Modbus mode: local / remote | ***Local / Remote*** |
| 42 | Modbus downtime | ***Timeout*** |
| 43 | Modbus: operating mode in remote | ***Remote Mode*** |
| 44 | External setpoint W3 | ***W3*** |
| 45 | Predefined output | ***SetLoad*** |
| 46 | AZL fuel selection | ***CurrentFuel*** |
| 47 | Setpoint W1 | ***SetpointW1*** |
| 48 | Setpoint W2 | ***SetpointW2*** |
| 49 | Weekday | ***Weekday*** |
| 50-52 | Date | ***Date*** |
| 53-55 | Time of day | ***TimeOfDay*** |

| Modbus Address | Description | LMV5 Parameter |
|---|---|---|
| 56, 57 | Hours run on gas | ***GasFiring*** |
| 58, 59 | Hours run on oil stage 1 | ***OilStage1/Mod*** |
| 60, 61 | Hours run on oil stage 2 | ***OilStage2*** |
| 62, 63 | Hours run on oil stage 3 | ***OilStage3*** |
| 64, 65 | Total hours run (resettable) | ***TotalHoursReset*** |
| 66, 67 | Total hours run (not resettable) | ***TotalHours*** |
| 68, 69 | Total hours system has been powered | ***SystemOnPower*** |
| 70, 71 | Startup counter gas | ***GasStartCount*** |
| 72, 73 | Startup counter oil | ***OilStartCount*** |
| 74, 75 | Startup counter total (resettable) | ***TotalStartCountR*** |
| 76, 77 | Startup counter total (not resettable) | ***TotalStartCount*** |
| 78, 79 | Total volume of gas | ***Volume Gas*** |
| 80, 81 | Total volume of oil | ***Volume Oil*** |
| 82 | Total number of lockouts | ***LockoutCounter*** |
| 83 | Additional sensor: current temperature | ***Temp. ColdStart*** |
| 84-91 | AZL5 ASN | ***ASN*** |
| 92 | AZL5 parameter set code | ***ParamSet Code*** |
| 93 | AZL5 parameter set version | ***ParamSet Vers*** |
| 94-96 | AZL5 identification date | ***ProductionDate*** |
| 97 | AZL5 identification number | ***SerialNumber*** |
| 98-105 | LMV5 ASN | ***ASN*** |
| 106 | LMV5 parameter set code | ***ParamSet Code*** |
| 107 | LMV5 parameter set version | ***ParamSet Vers*** |
| 108-110 | LMV5 identification date | ***ProductionDate*** |
| 111 | LMV5 identification number | ***SerialNumber*** |
| 112 | AZL5 software version | ***SW Version*** |
| 113 | LMV5 software version | ***SW Version*** |
| 114 | Load c ontroller software version | ***SW Version*** |
| 115-122 | Burner ID | ***BurnerID*** |
| 123 | Minimum allowed load on gas | ***MinLoadGas*** |
| 124 | Maximum allowed load on gas | ***MaxLoadGas*** |
| 125 | Minimum allowed load on oil | ***MinLoadOil*** |
| 126 | Maximum allowed load on oil | ***MaxLoadOil*** |
| 127 | Load limitation end user, modulating | ***User MaxLoadMod*** |
| 128 | Load limitation end user, multi-stage | ***User MaxLoadStg*** |
| 129 | Temperature limiter ON differential | ***TL_SD_On*** |
| 130 | Measuring range for temperature sensors | ***MeasureRangePtNi*** |
| 131 | Adaption active / inactive | ***StartAdaption*** |
| 132 | Adaption state | ***StartAdaption*** |
| 133 | Start adaption | ***StartAdaption*** |
| 134 | Adaption output | ***AdaptionLoad*** |
| 135 | PID proprtional band value | ***P-Part*** |
| 136 | PID integral value | ***I-Part*** |
| 137 | PID derivative value | ***D-Part*** |
| 400-543 | Lockout history | ***LockoutHistory*** |
| 544-711 | Fault history | ***FaultHistory*** |

## Starting adaption via Modbus

The routine used for identifying the path in the integrated load controller (termed “adaption” here) of the LMV5... system can be controlled and monitored via Modbus.

In principle, the general conditions are the same as those used when making adaptions with the AZL52... (refer to subsection 6.4.2 *Self-setting of control parameters (adaption*)) in the Basic Documentation of the LMV5... system (P7550).

The terms *Start adaption*, *Adaption active / inactive* and *Adaption state* indicate the respective Modbus addresses (refer to “Table of addresses”).

Start the adaption via *Start adaption* and change the value from $\neq 1$ to = 1. Starting the adaption has no impact on adaption processes already under way (*Adaption active / inactive* = 1).

If *Adaption active / inactive* = 1, the process can be monitored via *Adaption state* (refer to data type Adaption list). When *Adaption active / inactive* = 0, the adaption process is completed. On completion of the process, the result can be read out via *Adaption state*.

To complete the adaption process prematurely, the value at *Start adaption* must be changed from $\neq 2$ to = 2.

## Updating rate of AZL5

| | |
|---|---|
| Fast | System data that have already been updated automatically by the system process are available on request, at a typical repetition rate of 200 ms. |
| Medium | These data are cyclically queried in the system by the AZL... The typical updating rate here is 5 seconds, depending on system load. |
| Slow | These data are cyclically queried in the system by the AZL... The typical updating rate that can be expected here is 25 seconds, depending on system load. |
| Constant | These data are updated in the system by the AZL5... upon each *Power On* or reset. When making a query, the updated data will be available after 25 seconds. Data that cannot be changed (e.g. the production date, etc.) – neither with the AZL5... nor via the ACS450 – can be identified by the value of *0* in the first Byte of the strings. |
| Upon reset | Same as constant data, but these data can be changed in the system. |

## Error handling

| | |
|---|---|
| Error codes | The AZL… does not send any exception codes. A faulty message or a message with an invalid address or function code will receive no response. |

## Selection menus in the AZL5

### Activation of Modbus operation

Ensure the gateway mode is set to Modbus:
*Operation > OptgModeSelect > Type of Gateway*

Activation takes place via menu:
*Operation > OptgModeSelect > GatewayBASon*

Having made the selection, the menu item can be quit via ESC.The setting is retained until *Operation > OptgModeSelect > GatewayBASoff* is selected via the AZL… menu.

When GatewayBASon is activated, plant operation and diagnostics via the AZL... are still possible.

Deactivation takes place via menu:
*Operation > OptgModeSelect > GatewayBASoff*

### Slave address

Selection is made via menu:
*Params & Display > AZL > Modbus > Address*

According to Modicon specifications, addresses between 1...247 can be selected. The slave address is filed in nonvolatile memory of the AZL...

### Transmission parameters

| | |
|---|---|
| Transmission rate | The setting is made via menu:<br>*Params & Display > AZL > Modbus > Baudrate.*<br>There is a choice of 9600 bit/s or 19200 bit/s. |
| Parity | Using the AZL... menu:<br>*Params & Display > AZL > Modbus > Parity*,<br>parity can be set to none, even or odd. |

### Timeout communication failure

When there is no Modbus communication, this timeout defines the period of time on completion of which the AZL… changes automatically from Remote to Local.

The setting is made via menu *Params & Display > AZL > Modbus > Timeout*.

### Local «-» Remote mode

This setting defines whether the AZL… shall work in Local or Remote mode.

### Remote mode

Display of Remote Auto, Remote On, Remote Off mode. A change can only be made via Modbus.

## AZL5 interface

### General

The AZL... serves the Modbus via its COM2 port (8-pole Western jack RJ45). The port is assigned to the functional low-voltage range.

Assignment of RJ45 pins:

| PIN | | |
|---|---|---|
| 1 | TXD (RS-232 level or V28) | Modbus |
| 2 | Not used | |
| 3 | RXD (RS-232 level or V28) | |
| 4 | GND | |
| 5 | U1 (typically +8.2V) | eBUS |
| 6 | GND | |
| 7 | U2 (typically -8.2V) | |
| 8 | Not used | |

When preparing and fitting a connecting cable between the AZL... and a converter, it is to be noted that PIN 5 and PIN 7 can deliver a current of 5 mA each. Adequate insulation against other potentials must be ensured.

The maximum permissible data line length between COM2 and a converter is 3 m. In exceptional cases, this data line length can be exceeded, depending on environmental conditions (electrical interference) and the type of cable used – without Siemens assuming responsibility.

To ensure protection against electric shock hazard, it must be made certain that AC 120 V lines are strictly separated from the functional low-voltage area.

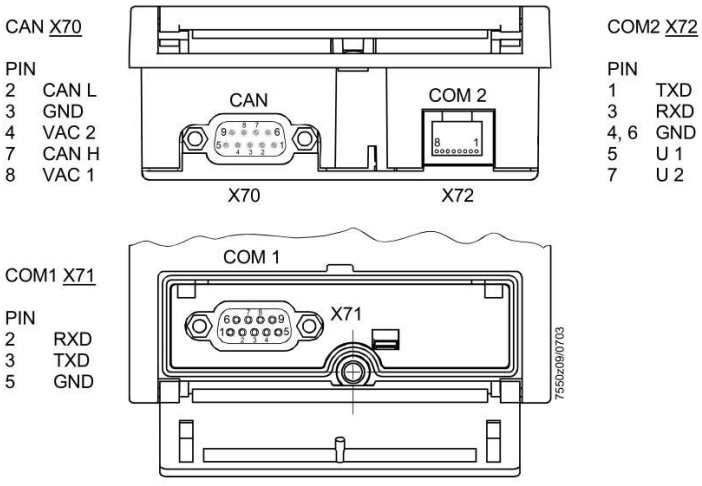


Note: COM1 (PC port) and COM2 cannot be active at the same time!

## RS-232 – RS-485 Converter

This converter converts a V.24 / RS-232 port into an RS-485 port.

## Technical Requirements

- Code transparency, that is, data must remain unchanged
- When using the RS-485 interface as a bus, control of the transmitting section on the RS-485 side must be ensured by the transmitter power of the AZL…
- The interfaces must be galvanically separated to improve EMC

## Available Converter (SCC Part Number K3SC-10-AC100-240)

RS-232 to Converter Wiring

| AZL COM2 (RJ45 Connection) | | RS-232 – RS-485 Converter (K3SC-10-AC100-240) | |
|---|---|---|---|
| **Terminal Number** | **Description** | **Terminal Number** | **Description** |
| 1 | TxD | 5 | SD |
| 3 | RxD | 6 | RD |
| 4 | GND | 3 | SG |

Converter to RS-485 Wiring

| RS-232 – RS-485 Converter (K3SC-10-AC100-240) | | RS-485 Field Connection |
|---|---|---|
| **Terminal Number** | **Description** | **Description** |
| 12 | SDB(+) | RS-485(+) |
| 9 | SDA(-) | RS-485(-) |
| 7 | SG | Signal ground |

Dip switch settings

The following dip switch settings are necessary to program the RS-232 to RS-485 converter for a 19,200 Baud rate, 8 data bits, 1 stop bit, no parity, and no echoback.

1: ON
2: OFF
3: ON
4: ON
5: ON
6: OFF
7: ON
8: OFF
9: OFF
10: OFF

## Overview of «Operating mode changeover of controller»

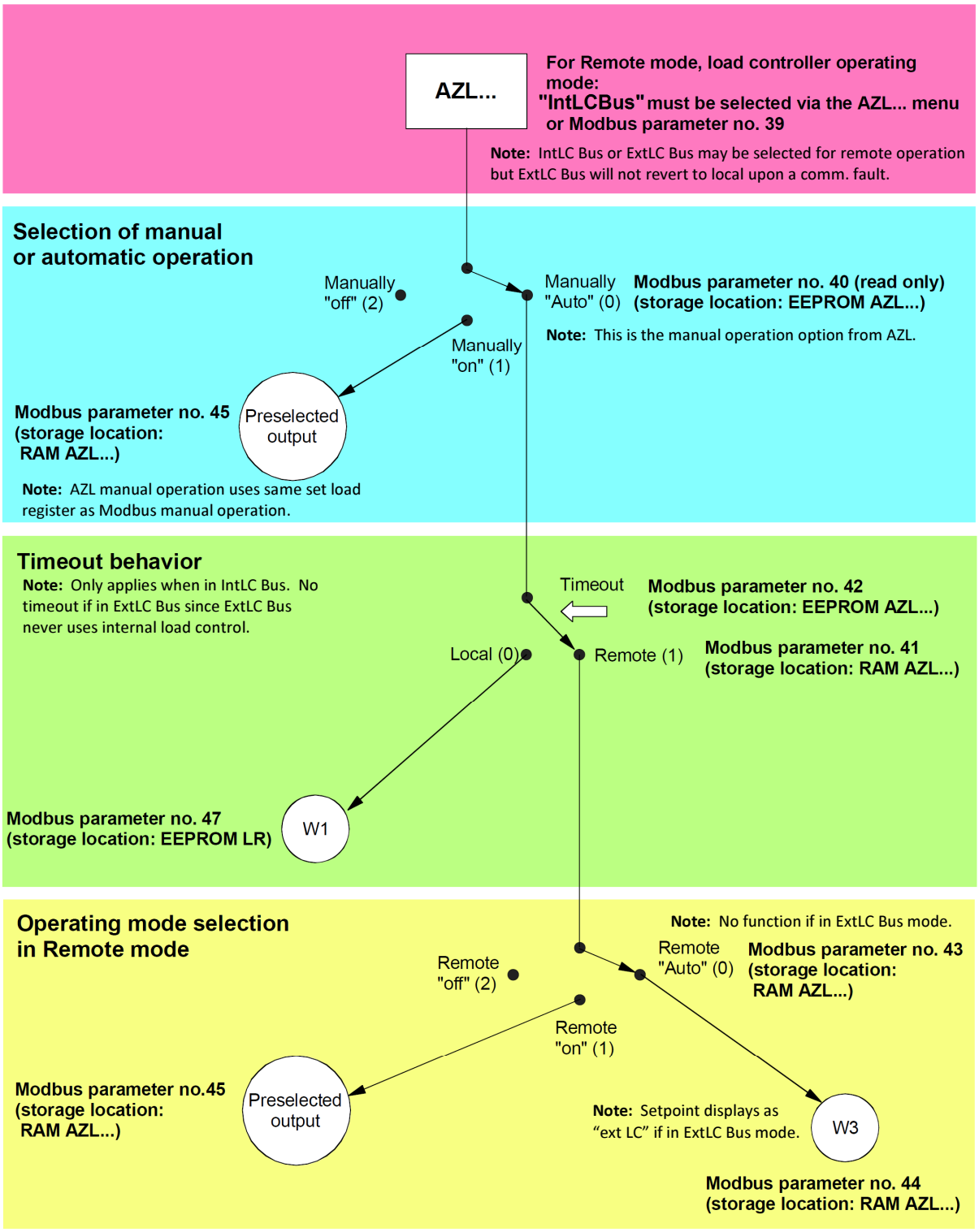

## W3 Setpoint Troubleshooting

If setpoint W3 is not being displayed as the current setpoint, check the following:

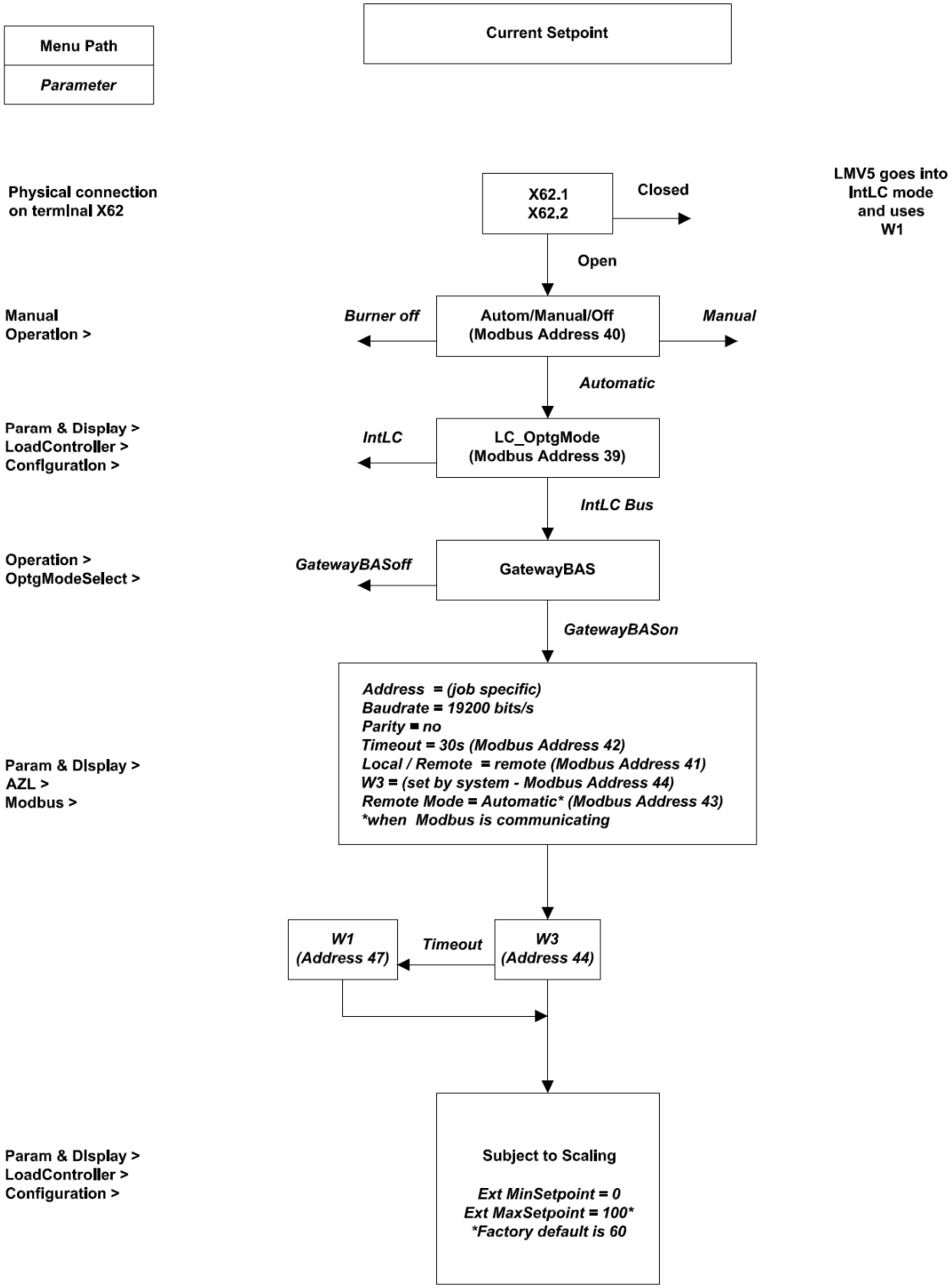

## Notes on operating modes

### Modbus downtime

When there is no more communication between BAS and AZL..., the Modbus downtime is used to switch over from Remote mode to the preselected setpoint in Local mode. The timer will be activated when changing from Local to Remote. With every permissible Modbus communication to this slave (AZL...), the timer will be reloaded. Should the timer lapse, the BAS must again set the Remote mode, if required. The timer value will be retained in EEPROM and will also be retained after power off.

When deactivating the "Gateway BAS" mode (menu item *OptgModeSelect > GatewayBASoff*), automatic changeover to Local takes place, that is, preselected output W1 will apply.

### Changeover of operating mode via parameter 43

This changeover was introduced primarily because of the requirements of boiler sequence control.
In that case, the individual boiler can be operated at low output via manually "On". When switching to "Auto" via sequence control, preselected output W3 will be used.

### Default parameter settings

| Parameter | Address | Storage location | Preselection | Choices for making changes |
|---|---|---|---|---|
| Setpoint W1 | 47 | EEPROM | See Basic Documentation «Menu and parameter lists» | • On the AZL... (menu)<br>• Preselection via Modbus |
| Setpoint W2 | 48 | EEPROM | See Basic Documentation «Menu and parameter lists» | • On the AZL... (menu)<br>• Preselection via Modbus |
| External setpoint W3 | 44 | RAM | «0» will be reinitialized when resetting the AZL... | • On the AZL... (menu)<br>• Preselection via Modbus |
| Set target load mod / multistage | 45 | RAM | «0» will be reinitialized when resetting the AZL... | • On the AZL... (menu)<br>• Preselection via Modbus |
| Local / Remote | 41 | RAM | «Local» | • Via Modbus<br>• On the AZL... (menu)<br>• Via lapse of timer «Communication failure» from Remote to Local |
| Selection of manual or automatic operation | 40 | EEPROM | See Basic Documentation «Menu and parameter lists» | • On the AZL... (menu) |
| Operating mode: Remote "off" / remote "on" / W3 | 43 | RAM | «Auto» will be reinitialized when resetting the AZL... | • Preselection via Modbus |
| Operating mode with load controller | 39 | EEPROM | See Basic Documentation «Menu and parameter lists» | |

**Note:** An AZL5 reset will be triggered when switching power on, or in the event of severe system errors.

## Important Modbus Notes

| Operating Mode (Address 39) | Remote Mode (Address 43) | X62 Action (Hard-wired) | Remote -> Local (Address 41) | Modbus Control Action |
|---|---|---|---|---|
| IntLC Bus | 0 (automatic) | Bumpless transition to W1 | Bumpless transition from W3 to W1 | Burner controls to W3 setpoint using internal load controller |
| | 1 (manual) | No transition to W1 but W1 is now displayed as setpoint | Bumpless transition if a valid W3 is already established | Burner modulates at commanded firing rate without load controller intervention |
| | 2 (burner off) | | Transition to W1 | Burner remains off |
| ExtLC Bus | 0 (automatic) | Bumpless transition to W1 | Local/Remote is not considered, remains at firing rate in memory | Burner modulates at commanded firing rate without load controller intervention* |
| | 1 (manual) | | | |
| | 2 (burner off) | | Local/Remote is not considered, remains off | Burner remains off |

*A value of 1 must be written to address 43 to turn the burner on if a value of 2 was previously written to address 43 to turn the burner off.

### Manual Operation

Manual operation from the AZL takes priority over any Modbus operation, although "SetLoad" is common to the remote firing rate. If a previous firing rate or "SetLoad" is established in memory, it will be used when manual or remote firing rate operation is commanded.

### ExtLC Bus Caution

In operating mode ExtLC Bus, a communication loss will cause the burner to stay in the last commanded state. If the burner was firing, it will restart at the firing rate in memory. If the burner was commanded off, operation will not resume unless communication is re-established or the operating mode is changed.

### Displayed Setpoint

When in ExtLC Bus, setpoint is displayed as "ext LC" since it is not used. When in IntLC Bus and providing a remote firing rate, the W3 setpoint is displayed (even if it is 0) although it is not used. It is important to send a valid setpoint for display purposes as well as for bumpless transfer to W1 after a communication timeout or switch to Local mode since a transition from firing rate control to W3 setpoint control will occur for at least one scan before assigning control to W1. If W3 is less than the actual setpoint plus the "off" hysteresis, the burner will shut down before transferring to W1. This is not necessary when going from Local to Remote, but would be good practice.

### Sequence of Control

Local to Remote: W1 setpoint control -> remote firing rate control
Remote to Local (or communication timeout): remote firing rate control -> W3 setpoint control (very briefly) -> W1 setpoint control

### Considerations When Using Remote Firing Rate Control

When the internal load controller is not used to provide the firing rate, functions such as the thermostat function and cold start function will not work. However, these should still be configured for use in Local mode. In Remote mode, it is important to duplicate the functionality when determining the firing rate. An additional temperature sensor connected to X60 for cold start can be read via Modbus address 83 if a Pt1000 or Ni1000 RTD is used.

Intentionally Left Blank

| | |
|---|---|
| Section 1 | Overview |
| Section 2 | Wiring |
| Section 3 | Parameters |
| Section 4 | Commissioning |
| Section 5 | VSD |
| Section 6 | $O_2$ Trim |
| Section 7 | Troubleshooting |
| Section 8 | Modbus |
| **Section 9** | **ACS450** |
| Section 10 | Revision History |
| Appendix A | Application Guide |
| Appendix B* | Complimentary Products Guide |


*Can be found at www.scccombustion.com.

HOME

| | |
|---|---|
| Section 1 | Overview |
| Section 2 | Wiring |
| Section 3 | Parameters |
| Section 4 | Commissioning |
| Section 5 | VSD |
| Section 6 | $O_2$ Trim |
| Section 7 | Troubleshooting |
| Section 8 | Modbus |
| **Section 9** | **ACS450** |
| Section 10 | Revision History |
| Appendix A | Application Guide |
| Appendix B* | Complimentary Products Guide |


*Can be found at www.scccombustion.com.

HOME

# Section 9-1: ACS450 Introduction

The LMV5 system can be completely programmed using either the AZL5 or a PC with the ACS450 software. Most people find that using the AZL5 is more convenient than the ACS450 for a "manual" setup of the LMV5 parameters. However, the ACS450 has additional capabilities that are not available with the AZL5 / LMV5 alone. These additional, valuable capabilities are:

1. Saving and printing all LMV5 settings, combustion curves, and information in a report format. This provides a convenient, comprehensive startup report.

2. Saving and uploading entire LMV5 parameter sets to or from a PC.

3. Updating AZL5 software.

4. Viewing and saving trends (particularly useful for tuning PID loops).

5. Viewing a "dashboard" of the LMV5 inputs and outputs as well as the LMV5 operating state.

Sections 9-2 through 9-4 will cover the software installation, communication setup, and AZL5 software updates. Sections 9-5 through 9-8 will explain how to utilize the basic capabilities of the ACS450 software, including startup reports, parameter sets, trending, and the "dashboard".

Since most people prefer to use the AZL5 to set parameters and combustions curves in the LMV5, the procedure to do this with ACS450 will not be covered in this guide. For technical information about how to program the LMV5 through the ACS450 software, email techsupport@scccombustion.com.

The ACS450 software can be used with the following PC operating systems:

- Windows 98 (ACS450 version 3.4 or older only)
- Windows 2000 (ACS450 version 3.4 or older only)
- Windows XP (ACS450 version 3.4 or older only)
- Windows 7
- Windows 8
- Windows 10

ACS450 cannot be used with the following PC operating systems:

- Windows Vista
- Windows ME

# 9-2: ACS450 Software Installation

The following steps outline the procedure for installing the ACS450 software on a PC:

1. The ACS450 software can be acquired in a couple of ways:
   a. Download it from the SCC website: *www.scccombustion.com/acs450_form.htm*
      - After filling out a short form, you will receive an e-mail containing the Username and Password required to download the software. Once the Username and Password are acquired, use the "click here" link on the same webpage in order to start the download.
   b. Download it from SCC's Combustion CD.
   c. Acquire it via an e-mail attachment.

2. The files shown below must reside in the same folder on the PC or on the CD before proceeding.

- acs450.msi
- InstMsiA.exe
- InstMsiW.exe
- setup.exe
- setup.ini

Double-click on the setup.exe file. This should start the installation. Pick the desired options as the installation prompts.

3. Once installed, the files will be located on the computer's hard drive at one of the following locations:

*C:\Program Files (x86)\ACS450*
*C:\Program Files (x86)\Siemens AG\ACS450*

4. Open these folders and check to make sure that all of the .cod files listed below are there. These are necessary for the AZL5 to communicate properly with the ACS450 software.

- Para_Nr_0400.cod
- Para_Nr_0410.cod
- Para_Nr_0420.cod
- Para_Nr_0450.cod
- Para_Nr_0460.cod
- Para_Nr_0470.cod
- Para_Nr_0480.cod
- Para_Nr_0490.cod
- Para_Nr_0500.cod
- Para_Nr_0510.cod

Any missing .cod files can be acquired from the SCC Combustion CD or by emailing techsupport@scccombustion.com.

5. At this point, the ACS450 is ready to run. The first time ACS450 is started it will prompt for a license code. When prompted, type the following license code: **041028000703GH.**

# 9-3: AZL5 Communication Setup

The following steps summarize the procedure for establishing communication between the AZL5 and a PC.

1. The table below outlines the cables necessary for connecting the PC to the AZL5. These cables will vary depending on whether or not the PC has a serial port to connect to.

**Table 9-3.1: Necessary Cables to Connect PC to AZL5**

| Type of PC | Null modem cable | USB-to-serial converter w/ FTDI chipset |
|---|---|---|
| PC with serial port | X | |
| PC without serial port | X | X |

For convenience, SCC stocks both the null modem cable and the USB-to-serial cable with the FTDI chipset. See Section 1 for part numbers and technical information for these cables.

2. Once the correct connection cables are acquired, the PC can be connected to the AZL5. Plug one end of the connection cable into the 9-pin RS-232 port on the front of the AZL5 (under the front cover). Plug the other end of the connection cable into the PC.

3. In order to connect, the AZL5 must be put into *InterfacePC* mode. This selection is found using the following menu path in the AZL5:

*Operation > OptgModeSelect > InterfacePC*

4. Once the AZL5 is in *InterfacePC* mode, attempt to connect with the ACS450 on the user level. This is done by going to the "System LMV5x" dropdown menu and selecting "Connect". When the dialog box appears, select "User" and press OK. If the connection is successful, proceed to step 5.

If the connection is not successful, check the com port settings. To check which com port the connection cord is plugged into, open the computer's Device Manager. Once open, expand the "Ports (COM & LPT)" tab and check which com port is called "USB Serial Port". This port must match the port that the ACS450 software is reading. The com port being read by the ACS450 can be changed by going to the "System LMV5x" dropdown menu and selecting "Options".

**Note:** The ACS450 software only recognizes com ports 1 through 8. If the port that the connection cord is plugged into is higher than 8, it needs to be changed. This is done by right-clicking on "USB Serial Port" and selecting "Properties". Go to the "Port Settings" tab and click "Advanced". From here, the com port number can be changed to any number that is not currently being used by another device.

5. After the connection at the user level is successful, disconnect from the AZL5 and then reconnect at the service or OEM level, if desired. This is done by going to the “System LMV5x” dropdown menu and selecting “Disconnect”. Remember that a password will be necessary to access the LMV5 on the service or OEM level and that the password is case-sensitive.

**Note**: If a fault window appears, it is not necessary to close the fault window. It can be moved to the side and temporarily ignored. Most tasks can be performed with the fault window open. If the fault window is closed and the fault is not cleared, the fault window will reappear in a few seconds.

## 9-4: AZL5 Software Updates

The AZL5 software package is frequently updated with new parameters and features. The software of any AZL5 can be updated using the ACS450 software. If the AZL5 ever states that there is a "Version Conflict" when it is connected to the LMV5, the AZL5 software needs to be updated via the ACS450 software.

The current software version of the AZL5 can be checked via the following menu path on the AZL5:

*Params & Display > Access w-out PW > AZL > SW Version*

At the time of publication, the latest software version is 5.10, which will display as "0510" on the AZL5.

The following steps outline the procedure for updating the software version of the AZL5.

1. Ensure that ACS450 is installed on the computer being used to update the AZL5 software. See Section 9-2 if necessary.

**Note**: Prior to attempting an AZL5 software update, deactivate the Modbus port (RJ45) on the bottom of the AZL5 if it is being used. The port can be deactivated under:

*Operation > OptgModeSelect > GatewayBASoff*

2. Locate the correct .bin file. The ACS450 will prompt for the file later in this procedure. The .bin file that is necessary for the update is shown below. If the .bin file cannot be located, it can be acquired from the SCC Combustion CD or by emailing techsupport@scccombustion.com.

- AZL52.00_V0510.BIN

3. Connect the PC to the AZL5 using the necessary cables. The requirements of this connection are outlined in Section 9-3.

4. On the main menu in the AZL5, scroll down to “Updating”. When “Enter” is pressed, a password prompt will appear. Either the service or OEM level password will be necessary. After access is gained, scroll down to “Load_SW_from_PC” and press “Enter”. This screen will state “Start Process with ENTER”. Do not press “Enter” at this time.

**Note:** If the AZL5 displays “Version Conflict”, press “Esc” on the AZL5 in order to get to the main menu. When the AZL5 is in a “Version Conflict”, **only** the service password will grant access to the “Load_SW_from_PC” option.

5. Open up the ACS450 on the computer, go to the “System LMV5x” dropdown menu, and select “Update AZL Flash”. The ACS450 will then ask for the .bin file. Locate and open the correct .bin file. Once the .bin file is opened, press “Enter” on the AZL5 to begin the update.

**Note:** It is important that steps 4 and 5 are completed as specified above. Make sure to press “Enter” on the AZL5 immediately after opening the .bin file on the computer. If these steps are performed too far apart, the update process could take a long time, or not happen altogether.

6. The AZL5 screen should say “SW-Update” on the top. If everything is working properly, the AZL5 should say “clearing flash” and then it should say “programming”. During the process, there should be a horizontal bar on the AZL5 screen and also on the computer screen that slowly fills in from the left to the right. The update procedure takes at least 5 minutes. When everything is finished, the ACS450 should say “Transfer finished, press cancel” and the AZL should say “SW-Update OK, FLASH : V05.00, cancel : left key”.

7. Press “Esc” on the AZL5. It will go into “System Test” and then come up normally. The AZL5 flash update is now complete.

# 9-5: Creating an LMV5 Startup Report

The following steps outline the procedure for saving, viewing and printing a startup report to a PC. The LMV5 must be in standby or lockout and have a burner ID to create a backup report.

**Saving the .mdb file**

1. Ensure that the ACS450 software is open, and the PC is connected to the AZL5 at the user, service, or OEM level. See Sections 9-2 or 9-3 if necessary. A full report will be saved at any password level. The report can be filtered later by password level when it is viewed.

2. Go to the ACS450 "System LMV5x" dropdown menu, and select "Backup for offline mode".

3. The ACS450 will then read the parameters on the LMV5 and compose a report. The status of the backup will be indicated on the backup window. The backup process may take up to 10 minutes. This report will be automatically saved in *C:\Program Files (x86)\ACS450\daten.* The file name is automatically saved as the burner ID of the LMV5.

4. After the backup process is complete, go to the ACS450 "System LMV5x" dropdown menu, and select "Disconnect". A window will appear that asks "Do you want to store parameters for offline mode?" Since this was just done in Step 3, it is not necessary to repeat. Click "No".

5. The ACS450 is now disconnected from the LMV5, and the .mdb file is saved. Once disconnected, the .mdb file can be viewed or printed with the ACS450 software.

**Viewing and printing the .mdb file contents**

6. Ensure that the ACS450 software is open, and **not connected** to the LMV5. Go to the "File" dropdown menu, and select "Show Parameters". When this is selected, a dialogue window will appear. Select the .mdb file to be opened. The default location for the .mdb files is *C:\Program Files (x86)\ACS450\daten.*

7. Once the file is selected, another window will appear for the access level. Any level can be chosen to view and print the parameter list without needing a password. The level chosen will affect what parameters appear, so selecting the OEM level will show all parameters available. Once the access level is selected, a list of the parameters and their settings should appear.

8. Once the parameter list is visible on the screen, it can be viewed and / or printed. The fault and lockout history can also be viewed and / or printed. To access the fault and lockout history, go to the "Parameters" dropdown menu and slide the cursor to "Operating State". The options of "Fault History" and "Lockout History" should appear. Click on either to view.

**Note**: Many people prefer to create the startup report in a more universal document format, such as a .pdf file type. This can be done with Adobe ® software that has a writer function. To create the .pdf files, simply print the desired pieces of the .mdb file to the .pdf writer instead of an actual paper and toner printer. Most people prefer to have a .pdf file of the parameter list, fault history, and lockout history. These pieces provide a very inclusive LMV5 startup report.

# 9-6: Saving and Uploading Parameter Sets

The following steps outline the procedure for saving parameter sets (.par files) to a PC and also uploading parameter sets from a PC to an LMV5.

**Saving a .par file to the PC**

1. Ensure that the ACS450 software is open, and the PC is connected to the AZL5 at the service or OEM level. See Sections 9-2 or 9-3 if necessary.

2. To save an LMV5 parameter set to a PC, go to the ACS450 "System LMV5x" dropdown menu, and select "Backup LMV > PC".

3. A window will appear titled "Backup LMV > PC" and will have a message at the bottom stating the "Status". The "Status" will start as "1" and will proceed to saying "Input file name". From the time the window appears to when the message states "Input file name" could take up to three minutes, but is usually less.

4. A comment can be typed in if desired. If not, click on "Save in File" and another window will come up. In this window, type the file name (a name containing the burner ID is recommended) and select an appropriate folder to save the file. The default location for .par file storage is *C:\Program files (x86)\ACS450\daten*. Click on "Save".

5. When being saved, the message on the "Backup LMV > PC" window should state "Reading Parameters". When saving is completed successfully, the message should say "Success, press Close". Click "Close". The .par file is now stored on the PC in the specified location.

**Note**: The .par file is stored in machine language, so it is not useful as a startup report.

**Uploading a .par file to the LMV5**

6. Ensure that the ACS450 software is open, and the PC is connected to the AZL5 at the service or OEM level. See Sections 9-2 or 9-3 if necessary.

7. To upload a parameter set from a PC to an LMV5, go to the ACS450 "System LMV5x" dropdown menu, and select "Restore PC > LMV".

8. A prompt will appear, asking for the desired .par file. Select the desired .par file and click on "Open". **This .par file will overwrite the parameter set on the LMV5 and will determine the behavior of the LMV5. Be sure that the correct .par file is selected.**

9. A window will appear titled “Restore PC > LMV”. If the message on the bottom of the window states “Burner ID is ok” or “New base unit”, then proceed to Step 11. If the message states “Burner ID is different”, proceed to the next step.

10. If the burner ID contained in the .par file is different than the burner ID on the LMV5, the ACS450 software will **not** permit the .par file to be uploaded to the LMV5. The exception to this is if the burner ID on the LMV5 is blank. If the burner ID is blank, then the upload is permitted. If the burner ID is different, two options are available (perform either option A or B below):

A. Change the burner ID on the LMV5 to match the burner ID contained in the .par file. This can be done via the ACS450 software or through the AZL5 directly. The OEM password is required to do this with either method.

   i. If using ACS450 – Once connected at the OEM level, go to the “Parameters” dropdown menu. The path to change the burner ID is *Operation > Burner ID*. Change the Burner ID in the dropdown menu.

   ii. If using the AZL5 - Disconnect the PC. Once disconnected, the path through the AZL5 is *Updating > Burner ID*. A prompt will appear for the password when “Updating” is selected on the AZL5.

B. Reset and then initialize the LMV5 using the ACS450.

   i. Connect to the LMV5 with the ACS450 at the Service or OEM level. After connecting successfully, go to the “System LMV5x” dropdown menu and select “Reset BU”. A reset window will appear that states the burner ID and fuel train will be deleted.

   ii. Click “Reset”, and the LMV5 will be reset (burner ID and fuel train). An alarm window will immediately appear that states “No Fuel Train Defined”. This alarm window does not need to be closed. The alarm window can be moved out of the way. Click on “Close” to close the reset window.

   iii. The burner ID and fuel train are now erased. Go under the “System LMV5x” dropdown menu and select “Disconnect”. A window will appear that asks “Do you want to store parameters for offline mode?” Click “No” if a backup (.mdb file) file is not necessary. If “Yes” is clicked, the ACS450 will create an .mdb file. The .mdb file creation can take up to 10 minutes. Creating an .mdb file is discussed in Section 9-5.

iv. Next, go to the “System LMV5x” dropdown menu and select “Init BU”. A window will appear and the ACS450 will begin reading the parameters. This will take a few minutes. After this is complete, a window will appear that asks for a .par file. Select the .par file that contains the parameter set to be uploaded. **This parameter set (.par) will overwrite the parameter set on the LMV5 and will determine the behavior of the LMV5. Be sure that the correct .par file is selected.**

11. Click on “Store in LMV”. This will start the upload process.

12. The following messages should appear on the “Restore PC > LMV” window. These messages are (in order): “Function Succeeded”, “Transferring Parameters”, “Status = 1”, “Status = 2”, “Status = 3”, and “Parameter Transfer Succeeded”. The upload process may take up to five minutes to complete. Also, an alarm may occur during the upload. This alarm is normal, and is to alert the technician that the new parameter set has been uploaded to the LMV5.

13. Once the “Parameter Transfer Succeeded” message is shown on the “Restore PC > LMV” window, click on “Close”. The alarm resulting from the upload can also be reset at this time. The upload is now complete.

# 9-7: Saving and Viewing Trends

The ACS450 software can be used to view and save trends. Trending enables a technician to easily view and quantify system behavior over time. This feature is particularly useful for setting up PID loops since “hunting” can be easily recognized on a trend. The following steps outline the procedure for viewing and saving trends with the ACS450 software:

1. Connect to the AZL5 at any access level. See Section 9-3 if necessary. After the connection is established, go to the “System LMV5x” dropdown menu and select “Record Trending”. A window will appear asking where the trending files are to be saved. Type an appropriate file name in front of the .tbd extension. A valid file name would look like: siemens.tdb. Notice that the * is no longer in the file name.

2. After the file name is typed in, click on “Open”. Click on “Yes” when the window appears asking if you would like to create the file. The trending screen should now appear and will look similar to Figure 9-7.1 below.

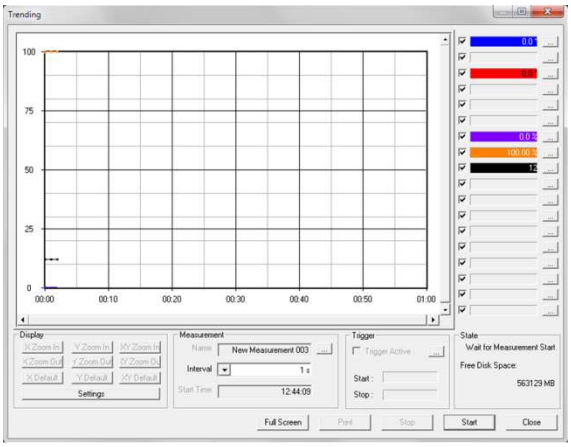


**Figure 9-7.1: The ACS450 Trending Screen**

3. The trending screen will trend all of the variables that are checked on the right hand side of the screen. These can be turned off and on by clicking on the checkmark. The variables can be identified and pen colors changed by clicking in the box to the right of each variable.

4. The title and measurement interval for the trend can be changed in the measurement box. Triggers can also be set to start the trending automatically.

5. After the trending screen is set up, trends can be recorded. To start recording a trend manually, click on “Start”. The “State” window should indicate that the measurement has started.

6. Trends will be buffered until “Stop” is clicked. When “Stop” is clicked, the trends will be saved under the previously defined .tbd file.

7. Trends can be viewed when the ACS450 is disconnected from the AZL5. To view trends, go to the “File” dropdown menu and select “Show Trending”. A window will appear prompting for the correct .tbd file.

8. Select the trend to be viewed or exported. If “Ok” is clicked, the trend can be seen in ACS450. If “Export” is clicked, a .csv file can be created that can be opened with Microsoft Excel.

# 9-8: Viewing the LMV5x Dashboard

When connected to the AZL5, the ACS450 can provide an overview screen or "dashboard". This provides a useful summary of the LMV5 inputs and outputs, as well as the operating state of the LMV5. The following steps outline the procedure for viewing the ACS450 dashboard:

1. Connect to the AZL5 at any password level. This is covered in Section 9-3.

2. Once connected, go to the "Parameters" drop down menu, followed by the "Operating State" menu. Click on "Normal Operation", and the dashboard should appear detailing the operating state of the LMV5. The dashboard looks like Figure 9-8.1 below.

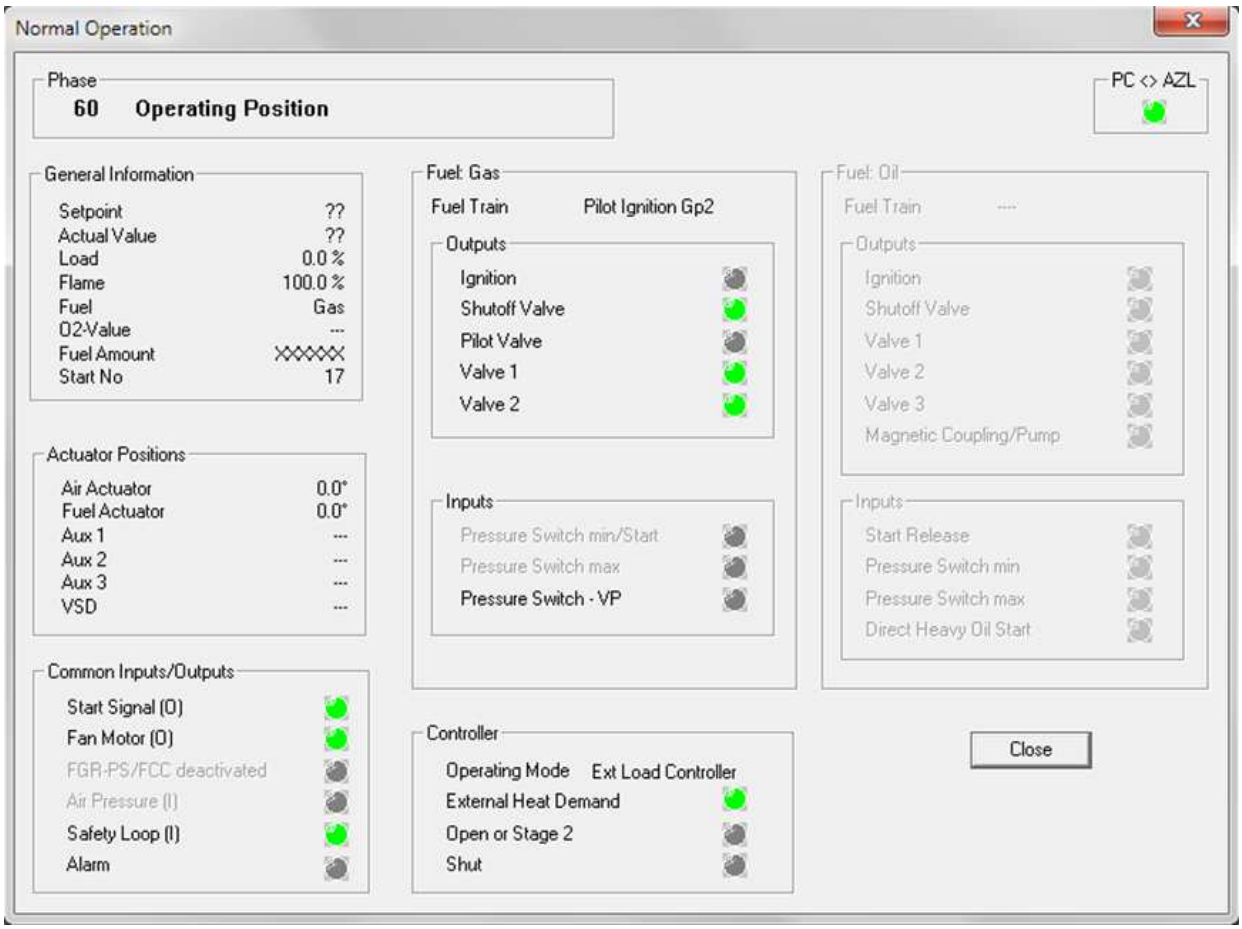


**Figure 9-8.1: The ACS450 Dashboard**

Intentionally Left Blank

| | |
|---|---|
| Section 1 | Overview |
| Section 2 | Wiring |
| Section 3 | Parameters |
| Section 4 | Commissioning |
| Section 5 | VSD |
| Section 6 | $O_2$ Trim |
| Section 7 | Troubleshooting |
| Section 8 | Modbus |
| Section 9 | ACS450 |
| **Section 10** | **Revision History** |
| Appendix A | Application Guide |
| Appendix B* | Complimentary Products Guide |


*Can be found at www.scccombustion.com.

HOME

| | |
|---|---|
| Section 1 | Overview |
| Section 2 | Wiring |
| Section 3 | Parameters |
| Section 4 | Commissioning |
| Section 5 | VSD |
| Section 6 | $O_2$ Trim |
| Section 7 | Troubleshooting |
| Section 8 | Modbus |
| Section 9 | ACS450 |
| **Section 10** | **Revision History** |
| Appendix A | Application Guide |
| Appendix B* | Complimentary Products Guide |


*Can be found at www.scccombustion.com.

HOME

# 10-1: Introduction

The LMV51, LMV52, and AZL5 have software packages that are frequently updated with new parameters and features. The revision history for each of these software packages will be covered in Sections 10-2 through 10-4.

**Table of Contents**

Section 10-2: LMV51 Software Version Updates....2
LMV51 Version 0210 to 0220....2
LMV51 Version 0220 to 0230....3
LMV51 Version 0230 to 0250....3
LMV51 Version 0250 to 0510....4
LMV51 Version 0510 to 0520....6
Load Controller Version 0140 to 0150....6
Load Controller Version 0150 to 0160....7
Load Controller Version 0160 to 0180....7
Load Controller Version 0180 to 0210....8

Section 10-3: LMV52 Software Version Updates....9
LMV52 Version 0130 to 0410....9
LMV52 Version 0410 to 0420....10
LMV52 Version 0420 to 0450....11
LMV52 Version 0450 to 0480....11
LMV52 Version 0480 to 0510....12
LMV52 Version 0510 to 1020....13
LMV52 Version 1020 to 1030....13
Load Controller Version Updates....13
VSD Module Version 0130 to 0140....14
VSD Module Version 0140 to 0150....14

Section 10-4: AZL5 Software Version Updates....15
AZL5 Version 0220 to 0250....15
AZL5 Version 0250 to 0410....16
AZL5 Version 0410 to 0420....17
AZL5 Version 0420 to 0430....17
AZL5 Version 0430 to 0450....17
AZL5 Version 0450 to 0460....17
AZL5 Version 0460 to 0480....18
AZL5 Version 0480 to 0500....19
AZL5 Version 0500 to 0510....20

# 10-2: LMV51 Software Version Updates

This section covers all of the revisions that were made to the LMV51 controller with each new software release. The software version of any LMV51 controller can be found using the following menu path:

*Params & Display > BurnerControl > SW Version*

The LMV51.1 also has a load controller with its own unique software version. The software version for the load controller can be found using the following menu path:

*Params & Display > LoadController > SW Version*

**LMV51 Software Update: Version 0210 to 0220**

The following updates were made with LMV51 software version 0220:

1. When the unit reaches the *Program stop* position, the AZL5 displays "*Programstop active".*

2. Alarm output X3-02.1 can be deactivated via parameter ***Alarm act/deact***. The current fault or lockout is still maintained on the AZL, but the 120V output is de-energized. Deactivation of the output remains active until a reset is made, another fault occurs, or a startup occurs.

3. A low oil pressure switch can now be activated when firing oil.

4. When firing oil, the oil safety valve output X6-03.3 de-energizes on completion of the afterburn time (end of phase 70). The fan output de-energizes after phase 79. Using parameter ***OilPumpCoupling***, it is now possible to choose between the described above (when using the magnetic clutch) or direct coupling of the oil pump. In the case of direct coupling, the oil safety valve must be connected to the output for the oil pump (X6-02.3). The oil safety is will always be controlled when the fan runs, plus another 15 seconds.

5. The evaluation of input *DWminOil* when using oil train "*Heavy oil with gas pilot"* has been moved from phase 38 to phase 44. *DWminOil* is only valued during the safety time after a delay time has elapsed.

6. The output signal to the air pressure switch test valve can be inverted using parameter ***Start/PS-Valve***. This output is only active when the fan operates.

7. If the burner operation is set to "*Manually on"*, the burner on / off contact (X5-03.1) acts as a shutoff device should an over-temperature situation occur. With the exception of operating mode 1 (ExtLC X5-03), the burner on / off contact can be deactivated if not being used as a shutoff device.

## LMV51 Software Update: Version 0210 to 0220 (continued)

8. After a safety shutdown, the longer prepurge time ***PrepurgeSafeGas/Oil*** becomes active.

## LMV51 Software Update: Version 0220 to 0230

The following update was made with LMV51 software version 0230:

1. After ignition, the actuators will drive to curve point 1 independent of whether or not the minimum load has been set to a higher value than the load of point 1. Once the actuators have reached point 1, they will then drive to the set minimum load.

## LMV51 Software Update: Version 0230 to 0250

The following updates were made with LMV51 software version 0250:

The product numbers of the LMV5 changed as follows:

LMV51.0x0Bx → LMV51.0x0Cx
LMV51.1x0Bx → LMV51.1x0Cx
LMV51.200Ax → no modification

To operate an LMV5 with the software versions listed above, it is necessary to have AZL5 software version 0410 or higher installed. Using this software, all AZL5s can now be updated.

The passwords are now encoded. The following other changes were made to the LMV5 basic units:

1. Introduction of a preset load for testing the safety limit thermostat (***SLT-Testload Mod***, ***SLT Testload Stg***).

2. Introduction of a burner startup without prepurging (***Skip Prepurge Gas***, ***Skip Prepurge Oil***).

3. Prepurge times 1 (t30) and 3 (t34) can be set at the OEM level.

4. Introduction of a repetition counter at the OEM level for loss of flame during operation (***LossOfFlame***).

5. Alarm in the event of start prevention in standby mode (***ShutdwnStbyOnErr***). In the case of a start prevention with no call for heat, it has previously not been possible to set off an alarm. Now an alarm can also be triggered in standby mode.

6. The inputs for oil are no longer checked when firing on gas. Likewise, the inputs for gas are no longer checked when firing on oil.

## LMV51 Software Update: Version 0230 to 0250 (continued)

7. The maximum filling and evacuation times for gas valve proving are now limited by the maximum permissible safety time for startup. In particular, this affects the burner control versions that use the American standard parameter set.

8. Introduction of max. load limitation at the user level (***UserMaxLoadMod***, ***UserMaxLoadStg***).

9. Hiding an adjustable load range aimed at reducing resonance phenomena in the burner/boiler/stack system (***LoadMaskLowLimit***, ***LoadMaskHighLimit***).

10. The fuel actuator can be deactivated (only with an LMV52).

11. A new flue gas recirculation (FGR) function (only with an LMV52). Actuator AUX3 can be employed for controlling the damper used for flue gas recirculation (FGR). To improve the burner's startup characteristics, only this actuator can be driven from its ignition position to the adjusted curve, either time-delayed or depending on the flue gas temperature.

12. A new option for no prepurge for gas burners (***Skip Prepurge Gas***). As per EN 676, the prepurge time can be skipped if a valve proving system is installed.

13. Changing the extraneous light test for OEMs. Now the OEM is able to skip the extraneous light test in the start sequence (***ExtranLightTest***).

14. The curve points can now be adjusted without actually running the actuators to the adjusted positions.

15. When running heavy oil, the high oil pressure switch can now be opened in phases 38 and 44 for the pressure switch reaction time.

## LMV51 Software Update: Version 0250 to 0510

The microcomputer PCB was converted to the same microcomputer PCB as in the LMV52 (known as platform conversion). This means that from the date of the switchover, these variants will also have the additional hardware input X7-03.2 *(*start release gas or POC), which was previously only available for the LMV52.

Additionally, the assignment of the software functions in the LMV5 has also been rearranged, meaning that the release upgrade includes functions from higher LMV5 variants as well as completely new functions.

The following updates were made with LMV51 software version 0510:

1. Configuration of new input X7-03.2 for start release gas or for various POC via parameter ***StartReleaseGas****.*

## LMV51 Software Update: Version 0250 to 0510 (continued)

2. The flue gas recirculation (FGR) pressure switch input X4-01.3 can be parameterized to not care in standby mode.

3. New configuration of load controller inputs X5-03.2 and X5-03.3 to act like an LMV3 via parameter ***Config X5-03***.

4. Connection of a pressure switch for valve proving (PS-VP) or POC.

5. Configuration of input X9-03.4 via parameter ***GasPressureMin*** can be set to *"deact xOGP"* to deactivate the input when firing oil.

6. Heavy oil direct start input X6-01.3 with more minimum temperature supervision options (phases 21-62, phases 38-62).

7. Air pressure supervision can be deactivated in standby mode by setting parameter ***AirPressureTest*** to "*deactInStby*".

8. Option to adjust the reaction time for loss of flame and the safety time in operation via parameter ***ReacTmeLossFlame***.

9. Configuration of input X5-03.3 via parameter ***Config X5-03*** to stop the startup sequence in phase 36 (driving to ignition position).

10. Using an air actuator and gas control valve, all modulating gas fuel trains can now also be used for burners with pneumatic or mechanical fuel air ratio control.

11. Parameter ***StartPoint Op*** available for setting which curve point the LMV5 drives to after lighting off.

12. Using parameter ***DriveLowfire Gas(Oil),*** drive to low fire may now start in phase 50.

13. Phases 50 and 52 are skipped if a non-pilot fuel train has been selected.

14. Manual output is unaffected by the load setting when programming the curve parameters, both via the AZL5 and Modbus.

15. With an external load controller at input X5-03, the integration time of the input signals is now established as a function of the ramp time.
Examples:

- For a 30-second ramp time, there will be a load increase of approx. 0.6% per cycle
- For a 60-second ramp time, there will be a load increase of approx. 0.3% per cycle

16. The minimum actuator step also applies when operating via Modbus or eBus remotely in order to protect the actuators.

17. Quick shutdown in multistage operation with a variable speed drive (VSD) is only performed if speed deviations are present that are above the parameterized threshold ***TolQuickShutdown***.

## LMV51 Software Update: Version 0250 to 0510 (continued)

18. When using gas with the flue gas recirculation function (FGR) and oil without the FGR function, switchover to oil will not occur until the FGR actuator is closed.

19. When the air rate is adjusted, the message *Ramp time too fast "actuator name*" now appears.

20. The setting range for the valve proving test times (phases 81 and 83) were increased from 63 seconds to 63 minutes.

21. Only on LMV51.1 – Other values other than the load are now available from analog output X63.

## LMV51 Software Update: Version 0510 to 0520

The following update was made with LMV51 software version 0520:

1. Expansion for SQM45 / SQM48 actuators with new parameter ***Pos. tolerance*** for changing the tolerance of the actuator position and VSD speed.

## Load Controller Software Update: Version 0140 to 0150

The following updates were made with LMV5 load controller software version 0150:

1. An auxiliary sensor can be added for cold start thermal shock protection.

2. Straightforward changeover of operation to internal load controller mode (IntLC). Using a potential-free contact at terminals X62.1 and X62.2, it is now possible to switch from other load controller modes to the internal load controller mode. The following operating modes can be switched over:

- IntLC X62 (mode 4) → IntLC (mode 2)
- ExtLC X62 (mode 5) → IntLC (mode 2)
- IntLC Bus (mode 3) → IntLC (mode 2)
- ExtLC Bus (mode 6) → IntLC (mode 2)
- ExtLC X5-03 (mode 1) → IntLC (mode 2)

3. Pt100 sensors in operating mode ExtLC Bus (mode 6) are now permitted.

4. New load controller functions for analog input and load output:

Manipulated variable input, modulating

- < 3 mA: Line interruption
- 4 mA / 2 Vdc: Low fire (minimum load)
- 20 mA / 10 Vdc: Nominal load (maximum load)

## Load Controller Software Update: Version 0140 to 0150 (continued)

Load output, modulating

- < 3 mA: Line interruption
- 4 mA: 0% load
- xx mA: Low fire (minimum load)
- xx mA: Nominal load (maximum load)
- 20 mA: 100% load
- Shutting the burner down = no impact on signal.

Manipulated variable input, multistage burner

- Stage 1: 5 mA or 2.5 Vdc
- Stage 2: 10 mA or 5 Vdc
- Stage 3: 15 mA or 7.5 Vdc

Switching thresholds at:

- 7.5 mA and 12 mA with 0.5 mA hysteresis
- 3.75 Vdc and 6.25 Vdc with 0.25 Vdc hysteresis

Load output, multistage

- Burner off: 4 mA
- Stage 1: 5 mA
- Stage 2: 10 mA
- Stage 3: 15 mA

## Load Controller Software Update: Version 0150 to 0160

The following updates were made with LMV5 load controller software version 0160:

1. The plausibility check at inputs X61 and X62 is not made anymore. This means that fast value changes at these inputs will no longer result in a safety shutdown.

## Load Controller Software Update: Version 0160 to 0180

The following updates were made with LMV5 load controller software version 0180:

1. Analog inputs 2 and 3 (X61, X62) have two additional ranges added: 0-10 Vdc and 0-20 mA.

## Load Controller Software Update: Version 0160 to 0180 (continued)

2. Analog output X63 has one additional range added: 0-20 mA.

3. The value of the analog output (e.g. load, temperatures, O2, etc.) can now be selected.

4. The measuring range for temperature input X60 added an additional option for Pt100, Pt1000, and Ni1000 sensors: 1562 °F [850 °C].

5. A new variable temperature range was added via parameter ***var. RangePtNi***.

6. Parameter ***MinActuatorStep*** also becomes active for external load controller modes.

## Load Controller Software Update: Version 0180 to 0210

The following updates were made with LMV5 load controller software version 0210:

1. The starting point for *ThermalShockProtection* was increased from 0% output to minimum output. At the deactivation of *ThermalShockProtection,* the load controller is initiated with the current output. Previously, the LMV5 moved to low fire and then to the current load.

2. At the end of the thermal shock protection program, the current temperature acquired by the Ni/Pt1000 sensor programmed as an additional sensor is now updated. The change only applies to a Ni/Pt1000 sensor, not to a Ni/Pt100 sensor. The temperature is displayed by the AZL52/ Modbus.

3. When using flue gas recirculation (FGR) mode "*TCautoDeact"*, in the event of an error of the Pt/Ni1000 sensor, a lockout is not triggered.

# 10-3: LMV52 Software Version Updates

This section covers all of the revisions that were made to the LMV52 controller with each new software release. The software version of any LMV52 controller can be found using the following menu path:

*Params & Display > BurnerControl > SW Version*

The LMV52 also has a load controller with its own unique software version. The software version for the load controller can be found using the following menu path:

*Params & Display > LoadController > SW Version*

Finally, the LMV52 has a VSD module with its own unique software version. The software version for the VSD module can be found using the following menu path:

*Params & Display > VSD Module > SW Version*

**LMV52 Software Update: Version 0130 to 0410**

The following updates were made with LMV52 software version 0410:

The product numbers of the LMV5 changed as follows:

LMV52.2x0Ax → LMV52.2x0Bx

To operate an LMV5 with the software versions listed above, it is necessary to have AZL5 software version 0410 or higher installed. Using this software, all AZL5s can now be updated.

The passwords are now encoded. The following other changes were made to the LMV5 basic units:

1. Introduction of a preset load for testing the safety limit thermostat (***SLT-Testload Mod***, ***SLT Testload Stg***).

2. Introduction of a burner startup without prepurging (***Skip Prepurge Gas***, ***Skip Prepurge Oil***).

3. Prepurge times 1 (t30) and 3 (t34) can be set at the OEM level.

4. Introduction of a repetition counter at the OEM level for loss of flame during operation (***LossOfFlame***).

5. Alarm in the event of start prevention in standby mode (***ShutdwnStbyOnErr***). In the case of a start prevention with no call for heat, it has previously not been possible to set off an alarm. Now an alarm can also be triggered in standby mode.

## LMV52 Software Update: Version 0130 to 0410 (continued)

6. The inputs for oil are no longer checked when firing on gas. Likewise, the inputs for gas are no longer checked when firing on oil.

7. The maximum filling and evacuation times for gas valve proving are now limited by the maximum permissible safety time for startup. In particular, this affects the burner control versions that use the American standard parameter set.

8. Introduction of max. load limitation at the user level (***UserMaxLoadMod***, ***UserMaxLoadStg***).

9. Hiding an adjustable load range aimed at reducing resonance phenomena in the burner/boiler/stack system (***LoadMaskLowLimit***, ***LoadMaskHighLimit***).

10. The fuel actuator can be deactivated (only with an LMV52).

11. A new flue gas recirculation (FGR) function (only with an LMV52). Actuator AUX3 can be employed for controlling the damper used for flue gas recirculation (FGR). To improve the burner's startup characteristics, only this actuator can be driven from its ignition position to the adjusted curve, either time-delayed or depending on the flue gas temperature.

12. A new option for no prepurge for gas burners (***Skip Prepurge Gas***). As per EN 676, the prepurge time can be skipped if a valve proving system is installed.

13. Changing the extraneous light test for OEMs. Now the OEM is able to skip the extraneous light test in the start sequence (***ExtranLightTest***).

14. The curve points can now be adjusted without actually running the actuators to the adjusted positions.

15. When running heavy oil, the high oil pressure switch can now be opened in phases 38 and 44 for the pressure switch reaction time.

## LMV52 Software Update: Version 0410 to 0420

The following updates were made with LMV52 software version 0420:

1. Check of AZL5 software version changed to version 0360 or higher.

2. Handling of open / closed release contact changed.

3. $O_2$ sensor test delayed until test conditions are reached.

4. Plausibility check of run time test rectified.

5. Timing problem in connection with flying start of VSD rectified.

## LMV52 Software Update: Version 0420 to 0450

The following updates were made with LMV52 software version 0450:

1. Abortion of speed test during operation by leaving the left operating position with controlled shutdown.

2. Implementation of functionality to reach the operating position after ignition via a curve point other than point 1 (***StartPoint Op***).

3. No more writing of diagnostic data in the ignition phases (not yet implemented with the VSD module).

4. Position evaluation of actuators and VSD in phases 20-22 removed.

5. Introduction of a timeout (ramp time) for opening the release contact when speed is not reached in standby and home run.

6. Evaluation of extraneous light during shutdown in phase 76 (second part of afterburn time) shifted.

7. Implementation of load adjustment with *ExtR-X5* and the fuel actuator is deactivated.

8. Response of start prevention changed when alarms are activated in standby and the QGO20 is not up to temperature.

## LMV52 Software Update: Version 0450 to 0480

The following updates were made with LMV52 software version 0480:

1. Flame failure during safety time 2 (*TSA2*).

2. Message for flame failure during safety time 2 (*TSA2*) changed from "*Loss of flame during operation"* to "*No flame at the end of the safety time"*.

3. In the case of fuel trains with direct ignition (G, LO, HO), phases 50 (*TSA2*) and 52 (interval 2) are skipped.

4. Introduction of a minimum test time of 5 seconds for extraneous light during startup in phase 36 (driving to ignition position).

5. In the case of a flying start, the VSD test is skipped.

6. Parameter ***MinLoadGas*** at the service level is valued higher than parameter ***UserMaxLoadMod*** at the user level.

7. When deleting the curve parameters, *StartPoint Operation,* the value used for overwriting parameters was too high. This has been rectified with version 4.80.

## LMV52 Software Update: Version 0450 to 0480 (continued)

8. A parasitic effect in the QRI2 flame scanner during the reset phase leads to a short signal pulse. Thus, flame evaluation during the reset is now delayed so the signal is ignored.

## LMV52 Software Update: Version 0480 to 0510

The following updates were made with LMV52 software version 0510:

1. A new option for flame supervision via an external, safety-related flame safeguard.

2. Continuous pilot is available for fuel trains using a pilot. If activated, the pilot valve remains open through phase 62.

3. A new calculation process is available for $O_2$ pre-control. The ***Type ofAirChange*** parameter was enhanced to include the "*LambdaFact1"* setting option.

4. When setting the $O_2$ setpoint curve, the minimum intervals accepted by the LMV52 have been reduced as follows:

- Interval between $O_2$ ratio control curve and $O_2$ setpoint curve: from 1% to 0.1%
- Interval between $O_2$ setpoint curve and $O_2$ alarm curve: from 0.5% to 0.1%

5. In $O_2$ operating mode "*conAutoDeac*", when the $O_2$ falls below the $O_2$ alarm value, the LMV5 initially operates along the ratio control curves. $O_2$ trim control is only deactivated automatically once the ***NumMinUntilDeact*** repetition counter has elapsed. The minimum $O_2$ alarm remains active even once $O_2$ trim control has been deactivated.

6. Omission of the waiting time following interruptions to the power supply if the QGO20 cell temperature is greater than 1274 °F [690 °C] on startup.

7. $O_2$ trim control behavior can be altered using the ***O2TrimBehavior*** parameter.

8. Limitations of the $O_2$ controller manipulated variable are now available via new parameters ***O2MinManVariable*** and ***O2MaxManVariable***.

9. Activation / deactivation of $O_2$ trim control via an external contact can be configured at input X5-03.3 using parameter ***Config X5-03***.

10. The status of the $O_2$ controller can be displayed via data point *State O2 Ctrl*.

11. The $O_2$ maximum value alarm has been revised. It can now be the $O_2$ ratio control curve or a set value. This is programmed via parameters ***Type O2 MaxValue*** and ***O2 MaxValue***.

12. A new service timer for the $O_2$ sensor is now available. This can be adjusted via parameter ***O2SensServTim*** and reset via parameter ***O2SensServTimRes***.

13. In order to calculate the combustion efficiency, the supply air temperature sensor can now be connected to input X60 as well as to input X87 on the PLL52 which was already available.

## LMV52 Software Update: Version 0510 to 1020

The following updates were made with LMV52 software version 1020:

1. New function: Temperature-compensated flue gas recirculation (FGR).

2. Driving to the low fire position from phase 50 is adjustable (***DriveLowfire Gas***, ***DriveLowfire Oil***).

3. Extended monitoring of the air pressure switch with new mode "*deactInStby".* When using this setting, the signal of the air pressure switch in standby is not evaluated. In case of continuous purging, only a start prevention is triggered and a message appears in place of a shutdown.

4. Extended monitoring of the air pressure switch for flue gas recirculation (FGR) with two new modes:
*deactInStby* - When using this setting, the signal of the air pressure switch for flue gas recirculation (FGR) in standby is not evaluated. In case of continuous purging, only a start prevention is triggered and a message appears in place of a shutdown.

*PS VSD* - When using this setting, the pressure switch for flue gas recirculation (FGR) must deliver an ON signal if the VSD speed lies above the speed set via parameter ***SP VSD PS on***.
If the VSD speed lies below the speed set via parameter ***SP VSD PS off,*** the pressure switch for flue gas recirculation (FGR) must deliver an OFF signal.

1. Specially designed for fiber mesh burners, various new start options have now been included for $O_2$ control and can be set via the ***Startmode*** parameter.

2. Long postpurge time (tn3) can be set up to 65,535 minutes via parameter ***PostpurgeT3Long***.

## LMV52 Software Update: Version 1020 to 1030

The following update was made with LMV52 software version 1030:

1. Expansion for SQM45 / SQM48 actuators with new parameter ***Pos. tolerance*** for changing the tolerance of the actuator position and VSD speed.

## Load Controller Version Updates

All load controller version updates to the LMV52 were the same as the updates for the LMV51. See pages 6-8 in this section for details on the load controller software updates.

## VSD Module Software Update: Version 0130 to 0140

The following updates were made with LMV52 VSD module software version 0140:

1. Opening of the release contact during shutdown can be set via parameter ***ReleaseContctVSD***. This enables the VSD module to use a DC break.

2. Quick shutdown of the burner when speed deviation exceeds parameter ***TolQuickShutdown***.

## VSD Module Software Update: Version 0140 to 0150

The following updates were made with LMV5 VSD module software version 0150:

1. To avoid error code A9, diagnostic 18 (Page disrupted*)*, statistics data are now only stored in standby and operation.

2. In some cases, the correction offset for the speed setpoint was not reset after a safety shutdown. This could lead to error messages. The new version eliminates this effect.

3. Internal system tests have been modified, allowing the VSD test initialized by the LMV5 to be dropped.

4. Quick shutdown of the VSD is also affected in programming mode.

# 10-4: AZL5 Software Version Updates

This section covers all of the revisions that were made to the AZL5 with each new software release. The software version of any AZL5 module can be found using the following menu path:

*Params & Display > AZL > SW Version*

**AZL5 Software Update: Version 0220 to 0250**

The following updates were made with AZL5 software version 0250:

1. The software version of the flash memory has been changed from V02.20 to V02.50.

2. For the load controller inputs 1 / 2 / 4, the following new parameter names have been assigned:

- Inp1/2/4Selection → Sensor Select
- Inp1/4BerEnd → MeasureRangePtNi
- Inp2TempBerEnd → MRange TempSens
- Inp2PressBerEnd → MRange PressSens
- Inp3Config_I/U → Ext Inp X62 U/I
- Inp3MinSetpoint → Ext MinSetpoint
- Inp3MaxSetpoint → Ext MaxSetpoint

3. When reading fuel usage in liters, a blank has been introduced between the value and the unit.

4. The transfer of parameter copies from new LMV5 controllers to the backup memory of the AZL5 is prevented. Copying is not possible and a message is delivered.

5. The default settings of the following parameters have been changed:

- PrepurgeTmeGas: 15 seconds
- MaxTmeLowFire: 45 seconds
- PostpurgePosAir: 15°
- PostpurgePosAux1: 25°
- PostpurgePosAux3: 25°
- PostpurgePosAux3: 25°
- SD_Stage1On: -2%

## AZL5 Software Update: Version 0220 to 0250 (continued)

6. The following name changes were made to the load controller operating modes:

- extLR → ExtLC X5-03
- intLR → IntLC
- intLR via BACS → IntLC Bus
- intLR BACS to → IntLC X62
- extLRanalg → ExtLC X62
- extLR via BACS → ExtLC Bus

7. New display text for actuator faults has been added. The AZL5 indicates a new fault carrying code 0x0E (too short ramp time):

- Too short ramp time, air actuator
- Too short ramp time, gas actuator
- Too short ramp time, oil actuator
- Too short ramp time, auxiliary actuator 1
- Too short ramp time, auxiliary actuator 2 (LMV52 only)
- Too short ramp time, auxiliary actuator 3 (LMV52 only)

## AZL5 Software Update: Version 0250 to 0410

The following updates were made with AZL5 software version 0410:

1. In the case of error code 16 and very flat or steep curves, tolerances can occur in connection with the family of curves of the LMV5. This effect was eliminated from LMV52 controllers with software version 0120 and higher. This effect was eliminated from LMV52 controllers with software version 0250 and higher.

2. Monitoring of the microprocessor's power supply is now more tolerant.

3. Error code 1E, diagnostic code 10 would appear after standardization of the VSD when ramp times were set above 35 seconds. The problem has been eliminated.

4. Change of load controller mode 6 to 2: The output can now be changed.

5. Smallest adjustable prepurge value for VSD has been changed to 10%

6. VSD correction with speed deviations has been changed.

7. Using the PC tool, a parameter set can now be stored in a new LMV5.

8. Modbus setpoint W3 (writing after reset) has been corrected.

## AZL5 Software Update: Version 0410 to 0420

The following updates were made with AZL5 software version 0420:

1. Display of additional temperature for steam boilers with thermal shock protection.
2. The system is now capable of handling imperial and metric units.
3. The Siemens AZL52 is supplied with English settings.
4. Over Modbus, the non-resettable fuel meters have been replaced by resettable ones.

The following new parameters are now available:

- Temperature acquired by the extra temperature sensor for over-temperature protection
- Flame signal (LMV51) / flame signal channel A (LMV52)
- Flame signal channel B (LMV52)

## AZL5 Software Update: Version 0420 to 0430

The following updates were made with AZL5 software version 0430:

1. Introduction of the Cyrillic character set.

## AZL5 Software Update: Version 0430 to 0450

The following updates were made with AZL5 software version 0450:

1. The load controller's switching thresholds now display absolute values as well, but the setting values are still relative values.
2. ***User MaxLoadMod*** is now limited by ***MinLoad*** and ***MaxLoad***.
3. Correction of Italian translation.
4. Transmission of pressure values via eBus has been corrected.
5. Access level to activate for the flame detector test has been changed to user-level.
6. Introduction of parameter ***StartPoint Op***.

## AZL5 Software Update: Version 0450 to 0460

The following update was made with AZL5 software version 0460:

1. The effect of error message 3163 in communication with ACS450 has been rectified.

## AZL5 Software Update: Version 0460 to 0480

The following updates were made with AZL5 software version 0480:

1. In connection with the new LMV52.4, only AZL5 units with software version 0480 and higher can be used. The AZL5 can also be used with all other types of LMV5. Due to the new parameters, the initially reserved storage space in the AZL5 had been exceeded. For this reason, specific product numbers had to be introduced for the LMV52.4.

2. Change to function *Modulating curve parameterization.* The temperature currently acquired by the flue gas recirculation (FGR) sensor is displayed if the flue gas recirculation (FGR) function is activated and the auxiliary 3 actuator has been selected for FGR.

3. New parameters ***OperationTempGas*** and ***OperationTempOil*** are available for reading and displaying the recorded flue gas recirculation (FGR) temperatures during commissioning.

4. Reading and display of the temperature currently acquired by the flue gas recirculation (FGR) sensor when the AZL5 is in interface mode. This is provided because the value is not displayed by the PC tool ACS450.

5. Support of the new flue gas recirculation (FGR) parameters.

6. The AZL5 accepts backup data from older software versions (both AZL5 and ACS450 backups).

7. To avoid misunderstandings, two names have been changed for the FGR operating mode:

- *Aux3onCurve* - When this operating mode is selected, the flue gas recirculation (FGR) function is deactivated and the auxiliary 3 actuator is driven to the ratio control curve. This means that if the auxiliary 3 actuator is used as a flue gas feedback actuator, flue gas would be recirculated.
- *deactMinpos* - Since the word *deact* was replaced by *Aux3oncurve,* the word *deact* is added here. This denotes that the auxiliary 3 actuator is driven to the minimum position so that no flue gas is recirculated (or only very small amounts).

8. The cold start thermal shock ON and OFF values are now also displayed as absolute values – in addition to the relative values.

## AZL5 Software Update: Version 0480 to 0500

The following updates were made with AZL5 software version 0500:

1. Three new languages are available for the AZL52.09 (Cyrillic): Bulgarian, Romanian, and Turkish.

2. The display when cold start thermal shock protection is active has been enhanced. The display no longer alternates between "*Coldstart is activated"* and "*Warning*". Now instead of "*Warning*", a display showing the actual values (temperature / pressure) appears.

3. During interface mode, the actual values for pressure or temperature and flue gas recirculation (FGR) temperature are now displayed.

4. A message appears when speed standardization is started and the safety loop is open.

5. Display of the raw flame signals even for LMV51 controllers.

6. The combustion efficiency is transmitted via Modbus or eBus as the value "0" if a valid value cannot be calculated.

7. Support of the new functions for the LMV52.4 for fiber mesh burners.

8. The absolute values of the ***SD_ModOn*** and ***SD_ModOff*** activation / deactivation values for the load controller with the units *°F / PSI* are now displayed correctly.

9. The text displayed on the AZL5 when parameters are being uploaded from the LMV5 to the AZL5 has been changed from "*Backup is made*" to "*Backup is being made*" in order to avoid misunderstandings.

10. The text displayed on the AZL5 when parameters are being downloaded from the AZL5 to the LMV5 has been changed from "*Backup restore is carried out*" to "*Backup restore is being carried out*" in order to avoid misunderstandings.

11. Display text has been corrected for the $O_2$ trim control delay time. "*Delay Time…*" is now shown instead of "*Dela Time…*".

12. Italian display text for backup corrected from *eseguio* (incorrect) in *eseguito*.

13. Designation for *O2 guard (O2 limiter, O2 monitor*) changed to *O2 alarm* for English.

14. Support of all new and enhanced parameters.

15. On software version 0500 of the AZL5, the restoring of backup data from LMV5 devices with a larger scope of functions and with more parameters into LMV5 devices with a smaller scope of functions and fewer parameters is prevented.
Example:

- Backup file from an LMV52 cannot be restored into an LMV51
- Backup file from an LMV51 can be restored into an LMV52

## AZL5 Software Update: Version 0500 to 0510

The following updates were made with AZL5 software version 0510:

1. The AZL52 normal operation indicator is switched between the internal and external setpoint depending on the switch position X62.

2. For parameters ***SD_ModOn*** and ***SD_ModOff,*** larger values are permitted for the switch-off hysteresis.

3. Parameter name corrections *Dutch 1*.

4. Parameter name corrections *Dutch 2*.

5. Parameter name corrections *French*.

6. Additional display value *Fahrenheit* / *Temperature*, is calculated correctly / displayed for the load controller from V02.20.

7. The maximum value of the safety times can be changed on the OEM access level.

8. New parameter ***Pos. tolerance*** for variable tolerance specification of the actuators and the VSD.

9. Parameter name correction *German Handbetrieb* replaced with *Manueller Betrieb.*

Section 1 Overview

Section 2 Wiring

Section 3 Parameters

Section 4 Commissioning

Section 5 VSD

Section 6 $O_2$ Trim

Section 7 Troubleshooting

Section 8 Modbus

Section 9 ACS450

Section 10 Revision History

**Appendix A Application Guide**

Appendix B* Complimentary Products Guide

*Can be found at www.scccombustion.com.

HOME

Section 1 Overview

Section 2 Wiring

Section 3 Parameters

Section 4 Commissioning

Section 5 VSD

Section 6 $O_2$ Trim

Section 7 Troubleshooting

Section 8 Modbus

Section 9 ACS450

Section 10 Revision History

**Appendix A Application Guide**

Appendix B* Complimentary Products Guide

*Can be found at www.scccombustion.com.

HOME

# Appendix A:
# LMV5 Application Guide

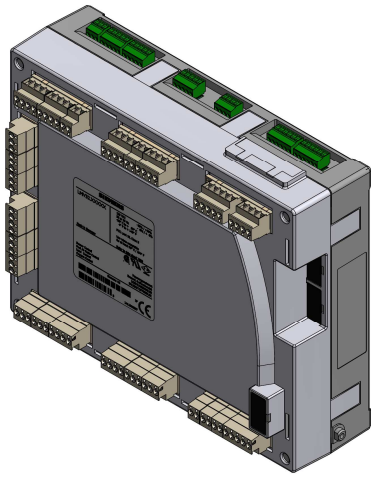

## Description

The LMV5 Application Guide includes programming, wiring, and operation examples of the control system for the most common applications.

# Table of Contents

**Continuous Purge**

Introduction....5
Procedure....5
Operation....6

**Direct Start**

Introduction....7
Procedure....7
Operation....9

**Hot Standby on a Steam Boiler with an RWF50 or RWF55**

Introduction....10
LMV5 with an RWF5x for Hot Standby Only....11
Procedure....11
Operation....12
Important Notes....12
LMV5 with an RWF55 for Hot Standby and Load Control....13
Procedure....13
Operation....14
Important Notes....14

**Hot Standby with a Temperature Switch**

Introduction....15
Procedure....16
Operation....16

# Table of Contents (continued)

**Low Fire Hold with an RWF55**

Introduction ..... 17
Procedure ..... 18
Steam Boiler with an RWF55 with Analog Output ..... 18
Hot Water Boiler with an RWF55 with Analog Output ..... 19
Steam Boiler with an RWF55 with 3-position Output ..... 20
Hot Water Boiler with an RWF55 with 3-position Output ..... 21
Operation ..... 22
Example ..... 22

**Pilot Valve Proving**

Introduction ..... 23
Procedure ..... 23
Option 1: On Startup with SKP25's on both the Pilot and Main Gas Trains ..... 25
Sequence of Operation ..... 26
Important Notes ..... 26
Option 2: On Startup, SKP25 on the Main Gas Train, Solenoid Valves on the Pilot Train ..... 27
Sequence of Operation ..... 28
Important Notes ..... 28
Option 3: Pilot Valve Proving on Startup and Main Valve Proving on Shutdown ..... 29
Sequence of Operation ..... 30
Important Notes ..... 30

**Purge Proving**

Introduction ..... 31
Procedure ..... 31
Operation ..... 32

# Table of Contents (continued)

**Remote Setpoint**

Introduction....33
Procedure....33
Example: Pressure Sensor Wired to Terminal X61....35
Example: Temperature Sensor Wired to Terminal X60....36
Example: Temperature Transmitter Wired to Terminal X61....37

**Valve Proving with Two Pressure Switches**

Introduction....38
Sequence of Operation....39
Important Notes....39

**VFD Bypass**

Introduction....40
Single Fuel Procedure....41
Single Fuel Operation....43
Dual Fuel Procedure....44
Dual Fuel Operation....45

# Continuous Purge

### Introduction

Continuous purge is a feature that allows the combustion air blower to remain on in all phases, including when the burner is shut down. This is typically used to prevent return heat from coming back into the burner.

On every startup, the LMV5 tests the blower air switch for proper operation. The switch contacts are required to open during standby and close during burner operation (phases 22-78). With continuous purge, the blower does not turn off. Thus, a 3-way solenoid valve must be installed to briefly divert air pressure to functionally test the blower air switch.

### Procedure

1. Install and wire a 3-way solenoid valve as shown in Figure 1.

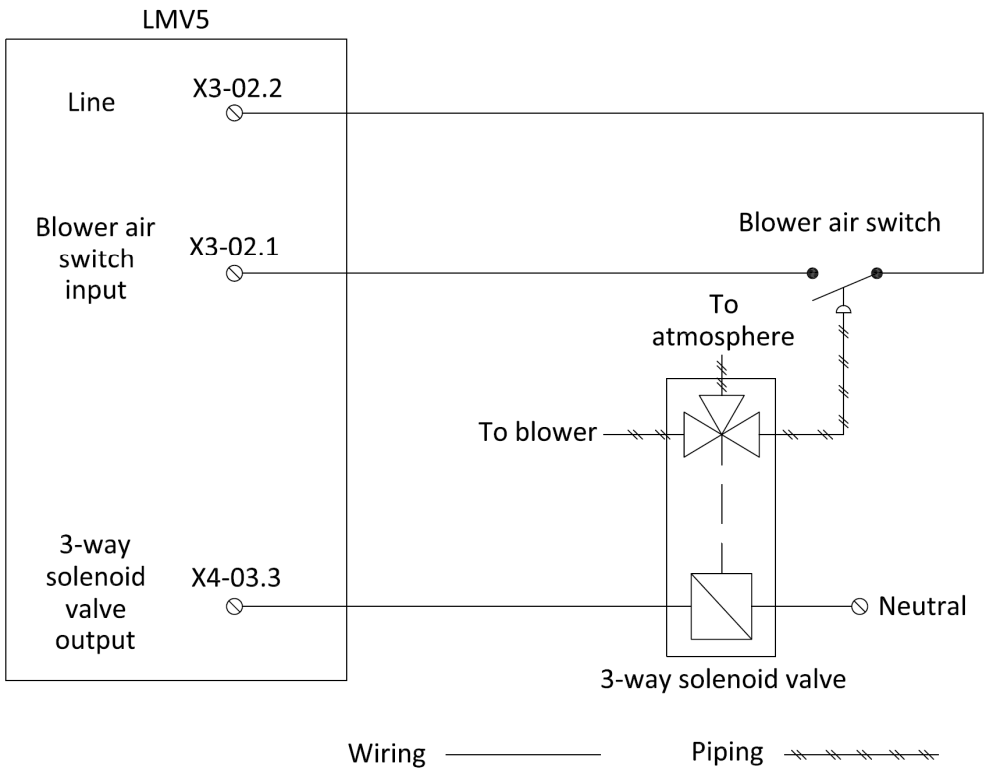


**Figure 1: Wiring a 3-way Solenoid Valve for Continuous Purge**

# Continuous Purge (continued)

2. Program the LMV5 to enable continuous purge through the following menu path:

   Params & Display > BurnerControl > Configuration > ConfigGeneral > ContinuousPurge = **activated**

3. Configure "Start/PS-Valve" (output terminal X4-03.3) to energize the 3-way solenoid valve that diverts air pressure away from the blower air switch. This can be programmed two different ways:

   **PS Relief** – The solenoid valve is energized to divert air pressure away from the blower air switch in phase 79.

   **PS Relief_inv** – The solenoid valve is energized to expose the blower air switch to air pressure in every phase except phase 79.

   Program the "Start/PS-Valve" parameter through the following menu path:

   Params & Display > BurnerControl > Configuration > ConfigIn/Output > Start/PS-Valve

**Operation**

If continuous purge is activated, the LMV5 operates as follows:

1. The combustion air blower runs at all times

2. After postpurge, the LMV5 enters phase 79 to perform a functional check of the blower air switch.

3. The 3-way solenoid valve either powers on or powers off depending upon the setting of parameter "Start/PS-Valve". The blower air switch must open and input X3-02.1 must be de-energized during phase 79 in order to proceed to standby without a lockout.

# Direct Start

### Introduction

Direct start accelerates the startup sequence of the burner. If the LMV5 is configured for direct start, the following cases enable this feature:

- A call for heat is received during shutdown (phases 62-78)
- A fuel changeover is requested while the burner is in operation (phase 60) or shutdown (phases 62-78)

The LMV5 skips the remainder of postpurge and proceeds to prepurge without turning the blower off.

On every startup, the LMV5 tests the blower air switch for proper operation. The switch contacts are required to open during standby of the boiler and close during blower operation. With direct start, the blower does not turn off before startup begins. A 3-way solenoid valve must be installed using direct start to briefly divert air pressure to functionally test the blower air switch.

### Procedure

4. Install and wire a 3-way solenoid valve as shown in Figure 1.

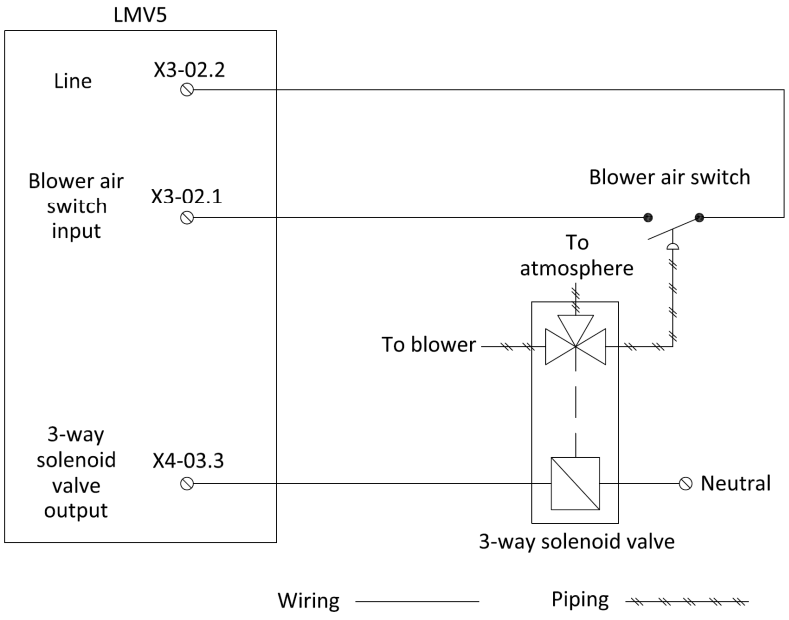


**Figure 1: Wiring a 3-way Solenoid Valve for Direct Start**

## Direct Start (continued)

5. Program the LMV5 to utilize direct start through the following menu path:

   Params & Display > BurnerControl > Configuration > ConfigGeneral > NormDirectStart = **DirectStart**

6. Configure "Start/PS-Valve" (output terminal X4-03.3) to energize the 3-way solenoid valve that diverts air pressure away from the blower air switch. This can be programmed two different ways:

   **PS Relief** – The solenoid valve is energized to divert air pressure away from the blower air switch in phase 79.

   **PS Relief_inv** – The solenoid valve is energized to expose the blower air switch to air pressure in every phase except phase 79.

   Program the "Start/PS-Valve" parameter through the following menu path:

   Params & Display > BurnerControl > Configuration > ConfigIn/Output > Start/PS-Valve

7. When using direct start, the postpurge time of the boiler is split into two stages:

   **PostpurgeT1Gas(Oil)** – Defines the mandatory postpurge time (phase 74). If the direct start option is selected and a call for heat exists, the LMV5 will postpurge for this minimum amount of time.

   **PostpurgeT3Gas(Oil)** – Defines the optional postpurge time (phase 78). If the direct start option is selected and a call for heat exists, the LMV5 will skip this postpurge time and go directly into prepurge after the functional test of the blower air switch.

   By minimizing the mandatory postpurge time, PostpurgeT1Gas(Oil), the full benefits of direct start are achieved. Even with direct start enabled, the LMV5 retains a full prepurge before opening the fuel valves and starting up. The optional postpurge time, PostpurgeT3Gas(Oil), is the time required for the proper amount of air exchanges on a normal shutdown. Both of these postpurge times can be set through the following menu path:

   Params & Display > BurnerControl > Times > Times Shutdown

# Direct Start (continued)

### Operation

Direct start accelerates the startup sequence in the following instances:

- The LMV5 loses the call for heat (terminal X5-03.1), and regains it before or during postpurge (phase 62-78)

- The LMV5 receives a fuel changeover request (terminal X4-01.1 or X4-01.2) during burner operation (phase 60) or shutdown (phases 62-78)

If either of these situations occurs, the LMV5:

4. Drives to low fire (phase 62) and shuts the fuel valves.

5. Ensures the flame signal drops out during the afterburn time (phase 70).

6. Drives to postpurge position (phase 72) and performs its mandatory postpurge (PostpurgeT1Gas(Oil), phase 74).

7. Proceeds to phase 79 and either powers on or off the 3-way solenoid valve dependent upon the setting of parameter “Start/PS-Valve”. The LMV5 verifies the operation of the blower air switch via input terminal X3-02.1 during phase 79.

8. Drives directly to prepurge position (phase 24) and proceeds to startup as normal.

# Hot Standby on a Steam Boiler with an RWF50 or RWF55

**Introduction**

Hot standby is recommended on multi-boiler systems to maintain one or more backup boilers close to operating temperature. Hot standby can be accomplished on an LMV5 with an RWF5x controller. The procedure and operation will be described for the following two methods:

- LMV5 with an RWF5x for hot standby control only
- LMV5 with an RWF55 for hot standby and load control

Table 2 describes the six different load controller operating modes in the LMV5.

**Table 2: Description of LMV5 Load Controller Operating Modes**

| Label | Description | Setpoint | Upon X62.1 – X62.2 Contact Closure |
|---|---|---|---|
| ExtLC X5-03 | External load control, firing rate from 3-position input | N/A | Change to "IntLC", setpoint W1 |
| IntLC | Internal load control, setpoint set locally on LMV5 | W1 | Remain in "IntLC", setpoint W2 |
| IntLC Bus | Internal load control, setpoint from Modbus command | W3 | Change to "IntLC", setpoint W1 |
| IntLC X62 | Internal load control, setpoint from analog signal on terminal X62 | Remote setpoint | |
| ExtLC X62 | External load control, firing rate from analog signal on terminal X62 | N/A | |
| ExtLC Bus | External load control, firing rate from Modbus command | N/A | |

If any operating mode other than "IntLC" is used, a contact closure between terminals X62.1 and X62.2 will cause the LMV5 to revert back to operating mode "IntLC". This is necessary to achieve hot standby on an LMV5 using the RWF5x to control the hot standby only.

# Hot Standby on a Steam Boiler with an RWF50 or RWF55 (continued)

### LMV5 with an RWF5x for Hot Standby Control Only

### Procedure

1. Wire the RWF5x to the LMV5 as shown in Figure 2.

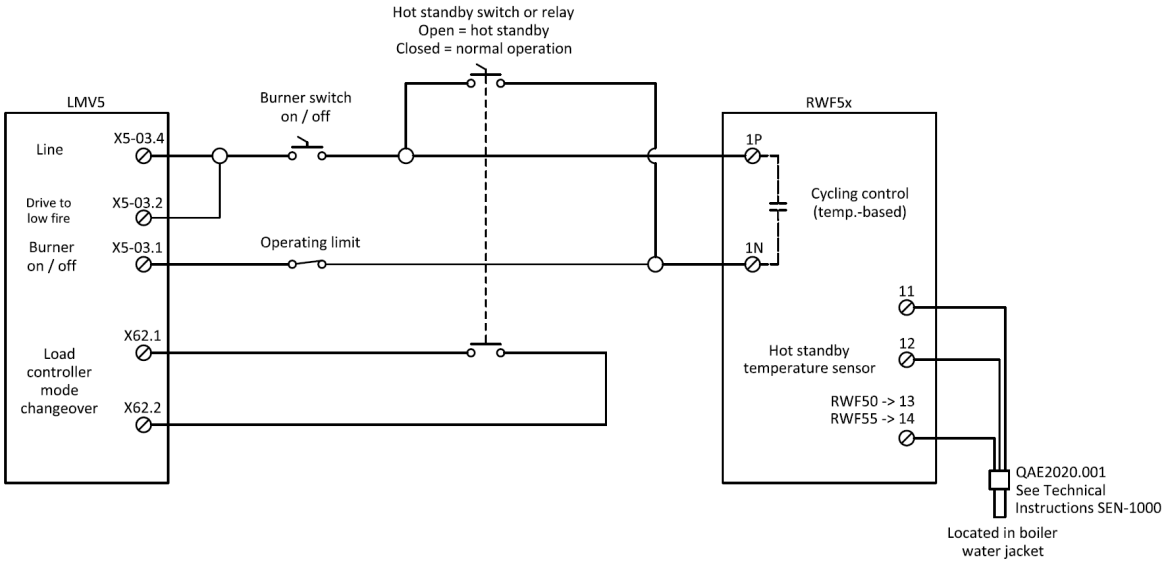


**Figure 2: LMV5 to RWF5x Hot Standby Only Wiring**

2. Set the LMV5 for load controller operating mode “ExtLC X5-03” through the following menu path:

   Params & Display > LoadController > Configuration > LC_OptgMode = **ExtLC X5-03**

3. Set the following parameters in the RWF5x controller. For more information, obtain Siemens Document No. U7866 for the RWF50 or Document No. U7867 for the RWF55 at www.scccombustion.com.

   ConF > Cntr > SPL = setpoint range lower limit
   ConF > Cntr > SPH = setpoint range upper limit
   OPr > SP1 = hot standby setpoint
   PArA > HYS1 = burner on for hot standby
   PArA > HYS3 = burner off for hot standby
   ConF > InP > InP1 > Sen1 = temperature sensor type

# Hot Standby on a Steam Boiler with an RWF50 or RWF55 (continued)

**Operation**

1. When the hot standby switch is open, the LMV5 system is in hot standby mode. The burner will turn on and off based on the limits set in the RWF5x controller. The contact between X62.1 and X62.2 will be open. The LMV5 will be in operating mode "ExtLC X5-03" and looking for a 3-position input for its firing rate command. Since line power from terminal X5-03.4 has been directly connected to the terminal that decreases the firing rate (X5-03.2), the LMV5 will stay at low fire until the burner turns off based on the burner off point set in the RWF5x (PArA > HYS3).

2. When the hot standby switch is closed, the system is in normal operation and not in hot standby. The contact between X62.1 and X62.2 will close, causing the LMV5 to change to operating mode "IntLC". The burner will be controlled based on the limits set in the LMV5.

**Important Notes**

1. Any RWF5x controller model will suffice for this hot standby option.

2. The RWF5x is operating only during hot standby mode.

3. The internal load controller of the LMV5 is used during normal operation.

# Hot Standby on a Steam Boiler with an RWF50 or RWF55 (continued)

### LMV5 with an RWF55 for Hot Standby and Load Control

### Procedure

1. Wire the RWF55 to the LMV5 as shown in Figure 3.

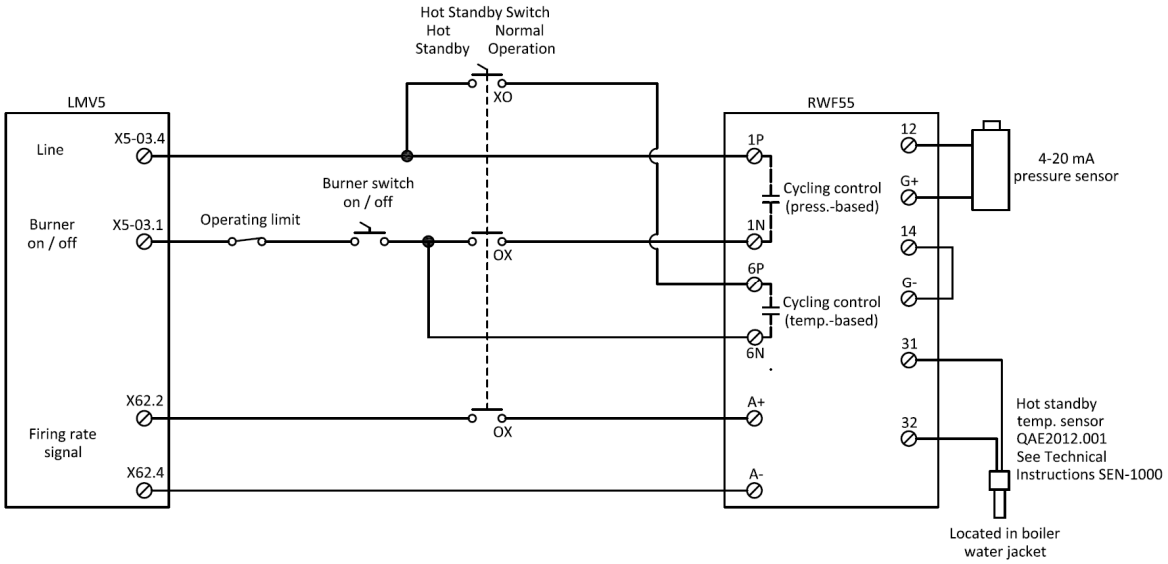


**Figure 3: LMV5 to RWF55 Hot Standby and Load Control Wiring**

2. Set the LMV5 for load controller operating mode “ExtLC X62” through the following menu path:

   Params & Display > LoadController > Configuration > LC_OptgMode =
   **ExtLC X62**

3. Set the load control input signal for 0-10 Vdc through the following menu path:

   Params & Display > LoadController > Configuration > Ext Inp X62 U/I =
   **0..10 V**

# Hot Standby on a Steam Boiler with an RWF50 or RWF55 (continued)

4. Set the following parameters in the RWF55 controller. For more information, obtain Siemens Document No. U7867 for the RWF55 at www.scccombustion.com.

   ConF > Cntr > CtYP = 2
   ConF > Cntr > SPL = setpoint range lower limit
   ConF > Cntr > SPH = setpoint range upper limit
   OPr > SP1 = normal operation setpoint
   PArA > HYS1 = burner on for normal operation
   PArA > HYS3 = burner off for normal operation
   ConF > InP > InP1 > Sen1 = pressure sensor type
   ConF > InP > lnP1 > SCL1 = 0
   ConF > InP > InP1 > SCH1 = high end of the range of the pressure sensor
   ConF > InP > InP3 > Sen3 = temperature sensor type
   ConF > InP > InP3 > dF3 = 0
   ConF > AF > FnCt = 12
   ConF > AF > AL = hot standby setpoint
   ConF > AF > HYSt = burner on / off for hot standby
   ConF > OutP > SiGn = 2

**Operation**

1. When the hot standby switch is set for hot standby, the LMV5 system is in hot standby mode. The burner will turn on and off based on the temperature limits set in the RWF55 controller for hot standby (ConF > AF). Since the signal to LMV5 terminal X62 is broken by the hot standby switch, the LMV5 stays at low fire until the burner turns off based on the burner off point set in the RWF55.

2. When the hot standby switch is set for normal operation, the system is in normal operation mode and not in hot standby. The burner will turn on and off based on the pressure limits set in the RWF55 controller for normal operation (PArA > HYS1 and PArA > HYS3). The signal to LMV5 terminal X62 determines the firing rate of the burner.

**Important Notes**

1. An RWF55 controller must be used for this hot standby option (not RWF50).

2. The RWF55 is operating as the load controller during normal operation as well as controlling the hot standby.

# Hot Standby with a Temperature Switch

### Introduction

Hot standby is recommended on multi-boiler systems to maintain one or more backup boilers close to operating temperature. A simple hot standby with an LMV5 is accomplished through the use of a temperature switch. A temperature switch closes a contact which allows the burner to release to modulation and exit hot standby mode. With proper wiring and parameter setup, this simple device will create an effective hot standby with an LMV5 controller.

Table 3 describes the six different load controller operating modes in the LMV5.

**Table 3: Description of LMV5 Load Controller Operating Modes**

| Label | Description | Setpoint | Upon X62.1 – X62.2 Contact Closure |
|---|---|---|---|
| ExtLC X5-03 | External load control, firing rate from 3-position input | N/A | Change to "IntLC", setpoint W1 |
| IntLC | Internal load control, setpoint set locally on LMV5 | W1 | Remain in "IntLC", setpoint W2 |
| IntLC Bus | Internal load control, setpoint from Modbus command | W3 | Change to "IntLC", setpoint W1 |
| IntLC X62 | Internal load control, setpoint from analog signal on terminal X62 | Remote setpoint | |
| ExtLC X62 | External load control, firing rate from analog signal on terminal X62 | N/A | |
| ExtLC Bus | External load control, firing rate from Modbus command | N/A | |

If any operating mode other than "IntLC" is used, a contact closure between terminals X62.1 and X62.2 will cause the LMV5 to revert back to operating mode "IntLC". This concept is necessary to achieve a hot standby with a temperature switch.

# Hot Standby with a Temperature Switch (continued)

**Procedure**

1. Set the LMV5 for load control operating mode “ExtLC X5-03” through the following menu path:

   Params & Display > LoadController > Configuration > LC_OptgMode = **ExtLC X5-03**

2. Wire a jumper between terminals X5-03.4 and X5-03.2 on the LMV5. Terminal X5-03.4 outputs 120 Vac at all times. When the LMV5 is in operating mode “ExtLC X5-03” and 120 Vac is on terminal X5-03.2, the LMV5’s firing rate decreases.

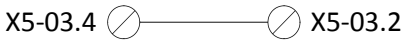


3. Wire the temperature switch contact between terminals X62.1 and X62.2 on the LMV5. This needs to be a normally-open contact that closes once the temperature of the boiler rises above the temperature setting on the temperature switch.

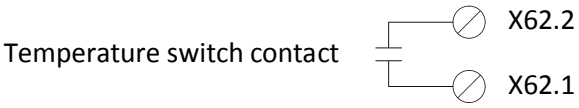


**Operation**

1. When the temperature of the boiler is below the temperature switch setting, the contact between X62.1 and X62.2 will be open. The LMV5 will be in operating mode “ExtLC X5-03”, waiting for a 3-position input for its firing rate command. Since line power from terminal X5-03.4 has been directly connected to the terminal that decreases the firing rate (X5-03.2), the LMV5 will remain at low fire.

2. Once the temperature rises above the temperature switch setting, the contact between X62.1 and X62.2 closes. The LMV5 changes to operating mode “IntLC” and modulates to maintain setpoint W1.

# Low Fire Hold with an RWF55

**Introduction**

Low fire hold assists in preventing boiler damage from thermal shock. If an RWF55 is the external load controller with the LMV5, a low fire hold can be easily incorporated. With an RWF55, a low fire hold is accomplished by breaking the increase load signal to the LMV5. The wiring and setup for four cases will be described:

- Steam boiler with an RWF55 with analog output
- Hot water boiler with an RWF55 with analog output
- Steam boiler with an RWF55 with 3-position output
- Hot water boiler with an RWF55 with 3-position output

Table 4 describes the six different load controller operating modes in the LMV5.

**Table 4: Description of LMV5 Load Controller Operating Modes**

| Label | Description | Setpoint | Upon X62.1 – X62.2 Contact Closure |
|---|---|---|---|
| ExtLC X5-03 | External load control, firing rate from 3-position input | N/A | Change to "IntLC", setpoint W1 |
| IntLC | Internal load control, setpoint set locally on LMV5 | W1 | Remain in "IntLC", setpoint W2 |
| IntLC Bus | Internal load control, setpoint from Modbus command | W3 | Change to "IntLC", setpoint W1 |
| IntLC X62 | Internal load control, setpoint from analog signal on terminal X62 | Remote setpoint | |
| ExtLC X62 | External load control, firing rate from analog signal on terminal X62 | N/A | |
| ExtLC Bus | External load control, firing rate from Modbus command | N/A | |

When executing a low fire hold with the RWF55, either "ExtLC X5-03" or "ExtLC X62" may be chosen for the LMV5's operating mode. The wiring and setup of the RWF55 differs slightly depending on the mode selected as shown on the following pages.

# Low Fire Hold with an RWF55 (continued)

**Procedure – Steam Boiler with an RWF55 with Analog Output**

In the case of steam boilers, temperature sensors located in the boiler water jacket are recommended. Technical Instructions SEN-1000 provides additional information on temperature sensors.

1. Set the following parameters in the LMV5:

   Params & Display > LoadController > Configuration > LC_OptgMode = **ExtLC X62**
   Params & Display > LoadController > Configuration > Ext Inp X62 U/I = **0..20 mA**

2. Set the following parameters in the RWF55:

   ConF > Inp > Inp1 > SEn1 = signal type of pressure sensor
   ConF > Inp > Inp1 > SCL1 = 0
   ConF > Inp > Inp1 > SCH1 = high end of the range of the pressure sensor
   ConF > Inp > Inp3 > SEn3 = type of RTD being used for a belly sensor
   ConF > InP > InP3 > dF3 = 0
   ConF > Cntr > CtYP = 2
   ConF > AF > FnCt = 11
   ConF > AF > AL = temperature to enable low fire hold
   ConF > AF > HYSt = deadband around low fire hold temperature
   ConF > OutP > FnCt = 4
   ConF > OutP > SiGn = 0

3. Wire the LMV5 and RWF55 as shown in Figure 4:

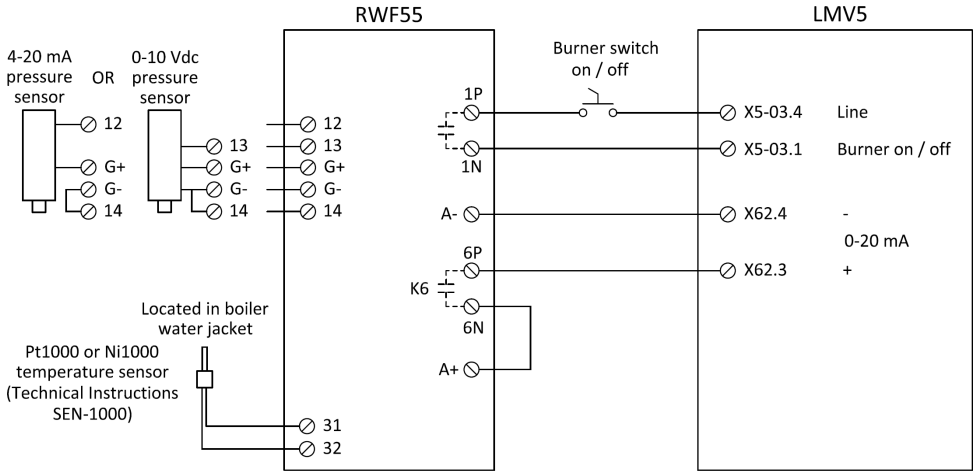


**Figure 4: Low Fire Hold via Analog Output on a Steam Boiler**

See page 19 for an example of the low fire hold operation.

# Low Fire Hold with an RWF55 (continued)

### Hot Water Boiler with an RWF55 with Analog Output

1. Set the following parameters in the LMV5:

   Params & Display > LoadController > Configuration > LC_OptgMode = **ExtLC X62**
   Params & Display > LoadController > Configuration > Ext Inp X62 U/I = **0..20 mA**

2. Set the following parameters in the RWF55:

   ConF > Inp > Inp1 > SEn1 = type of RTD being used for temperature sensor
   ConF > Cntr > CtYP = 2
   ConF > AF > FnCt = 7
   ConF > AF > AL = temperature to enable low fire hold
   ConF > AF > HYSt = deadband around low fire hold temperature
   ConF > OutP > FnCt = 4
   ConF > OutP > SiGn = 0

3. Wire the LMV5 and RWF55 as shown in Figure 5:

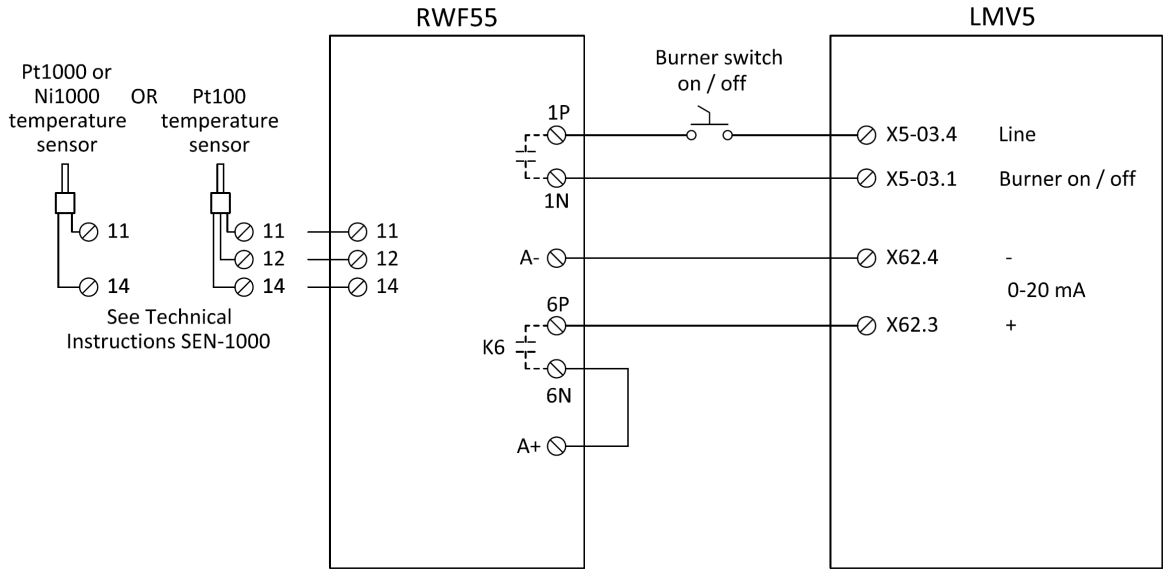


**Figure 5: Low Fire Hold via Analog Output on a Hot Water Boiler**

See page 19 for an example of the low fire hold operation.

# Low Fire Hold with an RWF55 (continued)

### Steam Boiler with an RWF55 with 3-position Output

In the case of steam boilers, temperature sensors located in the boiler water jacket are recommended. Technical Instructions SEN-1000 provides additional information on temperature sensors.

1. Set the following parameters in the LMV5:

   Params & Display > LoadController > Configuration > LC_OptgMode = **ExtLC X5-03**

2. Set the following parameters in the RWF55:

   ConF > Inp > Inp1 > SEn1 = signal type of pressure sensor being used
   ConF > Inp > Inp1 > SCL1 = 0
   ConF > Inp > Inp1 > SCH1 = high end of the range of the pressure sensor
   ConF > Inp > Inp3 > SEn3 = type of RTD being used for a belly sensor
   ConF > InP > InP3 > dF3 = 0
   ConF > Cntr > CtYP = 1
   ConF > AF > FnCt = 11
   ConF > AF > AL = temperature to enable low fire hold
   ConF > AF > HYSt = deadband around low fire hold temperature

3. Wire the LMV5 and RWF55 as shown in Figure 6:

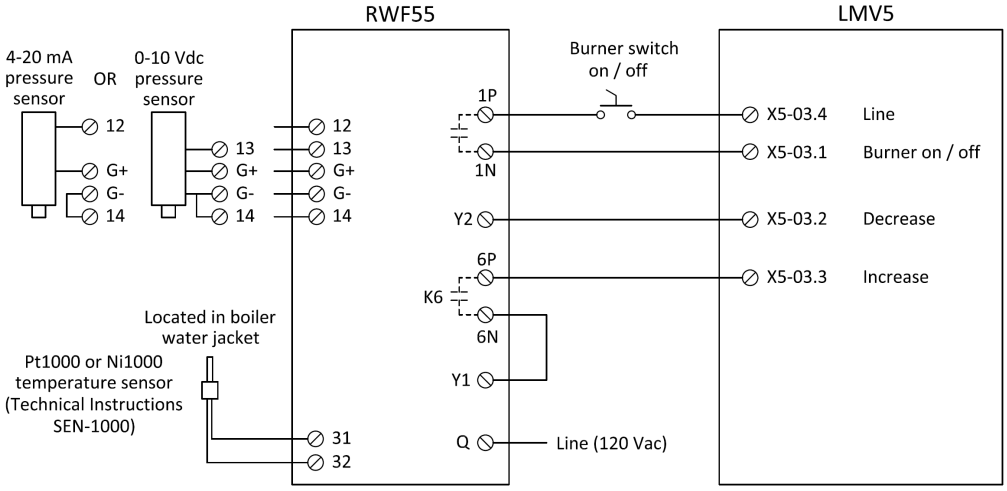


**Figure 6: Low Fire Hold via 3-position Output on a Steam Boiler**

See page 19 for an example of the low fire hold operation.

# Low Fire Hold with an RWF55 (continued)

### Hot Water Boiler with an RWF55 with 3-position Output

1. Set the following parameters in the LMV5:

   Params & Display > LoadController > Configuration > LC_OptgMode = **ExtLC X5-03**

2. Set the following parameters in the RWF55:

   ConF > Inp > Inp1 > SEn1 = type of RTD being used for temperature sensor
   ConF > Cntr > CtYP = 1
   ConF > AF > FnCt = 7
   ConF > AF > AL = temperature to enable low fire hold
   ConF > AF > HYSt = deadband around low fire hold temperature

3. Wire the LMV5 and RWF55 as shown in Figure 7:

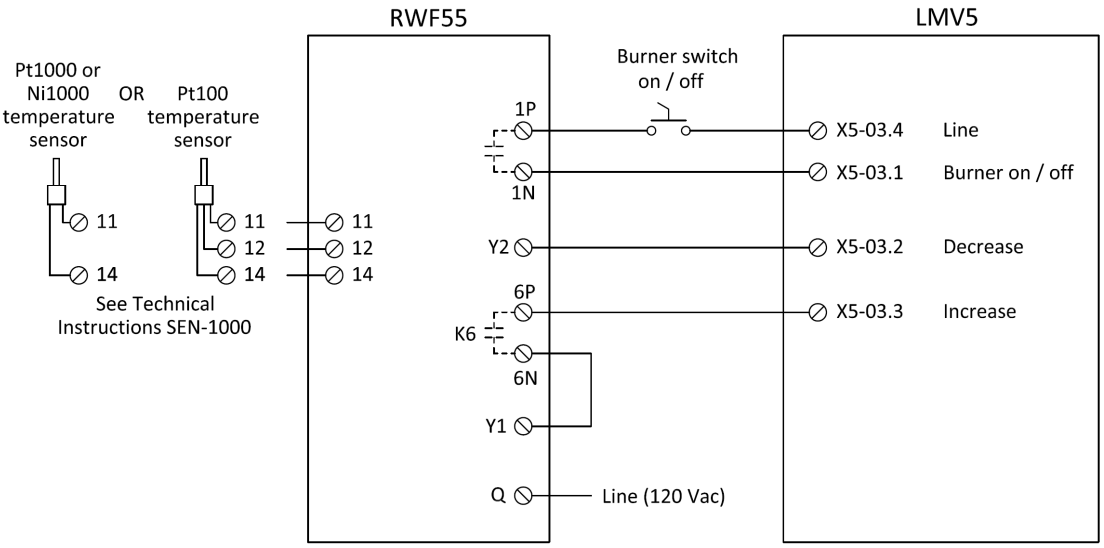


**Figure 7: Low Fire Hold via 3-position Output on a Hot Water Boiler**

See page 19 for an example of the low fire hold operation.

# Low Fire Hold with an RWF55 (continued)

### Operation

1. When the boiler temperature falls below the low fire hold temperature threshold (AL - 1/2 HYSt), contact K6 opens and prevents the LMV5 from increasing the firing rate. This is the case for either analog or 3-position output from the RWF55.

2. Once the boiler warms up above the low fire hold threshold (AL + 1/2 HYSt), contact K6 closes and the burner modulates according to the PID settings of the RWF55.

### Example

Low fire hold threshold settings:

AL = 180
HYSt = 10

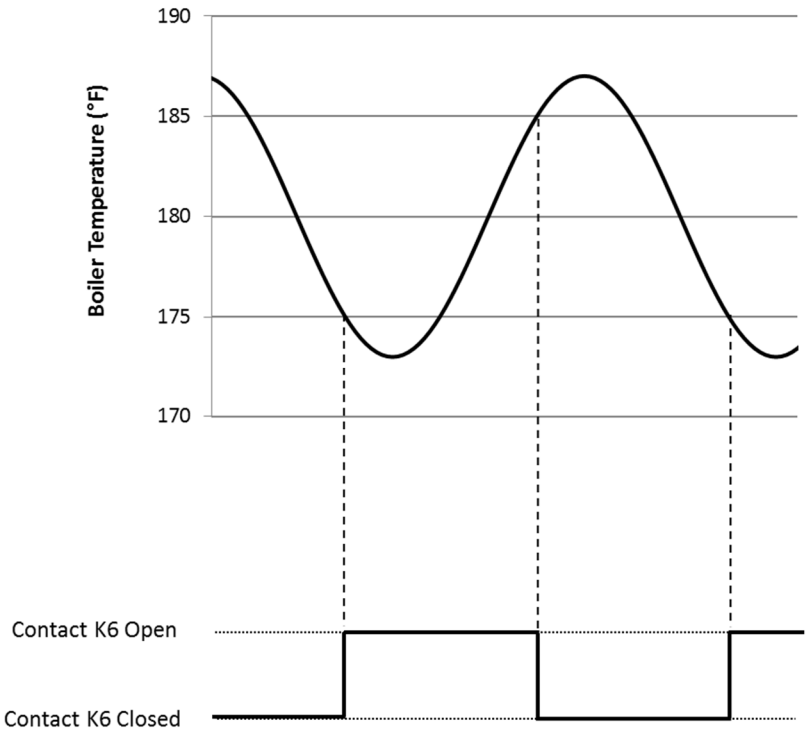


**Figure 8: Behavior of Contact K6 when Using an RWF55 for Low Fire Hold**

# Pilot Valve Proving

### Introduction

Valve proving detects if the main gas valves in a gas train are leaking. In addition to checking the main gas valves, the pilot valves may be tested for leakage as well. There are three options for performing pilot valve proving:

- Option 1: On Startup with SKP25's on both the Pilot and Main Gas Trains
- Option 2: On Startup, SKP25 on the Main Gas Train, Solenoid Valves on the Pilot Train
- Option 3: Pilot Valve Proving on Startup and Main Valve Proving on Shutdown

On the LMV5, valve proving of the main gas valves can be performed during startup, during shutdown, or during both startup and shutdown of the boiler. If pilot valve proving is added using Option 1 or Option 2, valve proving must be performed during startup of the boiler only. If pilot valve proving is added using Option 3, valve proving must be performed during both startup and shutdown of the boiler.

Pilot valve proving can be performed on any LMV52. Pilot valve proving can be performed on any LMV51 with a date code of 140131xxxx (Jan 31, 2014) or later.

### Procedure

1. The valve proving type can be set in the LMV5 through the following menu path:

   Params & Display > BurnerControl > ValveProving > ValveProvingType

   For Option 1 or Option 2, this must be set for "VP startup". For Option 3, this must be set for "VP stup/shd".

2. In addition to setting the valve proving type, input terminal X9-03.2 must be set for a valve proving pressure switch input. This can be done through the following menu path:

   Params & Display > BurnerControl > ValveProving > Config_PS-VP/CPI = **PS-VP**

## Pilot Valve Proving (continued)

3. The times for each of the four stages of valve proving need to be set. To do so, use the following menu paths in the LMV5:

   Params & Display > BurnerControl > ValveProving > VP_EvacTme
   Params & Display > BurnerControl > ValveProving > VP_TmeAtmPress
   Params & Display > BurnerControl > ValveProving > VP_FillTme
   Params & Display > BurnerControl > ValveProving > VP_Tme_GasPress

   "VP_EvacTme" is the time that the downstream valve is energized in order to evacuate the chamber between the upstream and downstream valves (phase 80). This is typically set to 3 seconds, but should not be set any less than the opening time of the valves.

   "VP_FillTme" is the time that the upstream valve is energized in order to pressurize the chamber between the upstream and downstream valves (phase 82). This is typically set to 3 seconds, but should not be set any less than the opening time of the valves.

   "VP_TmeAtmPress" is the time that both the upstream and downstream valves are closed to test the leakage rate of the upstream valve (phase 81). "VP_Tme_GasPress" is the time that both the upstream and downstream valves are closed to test the leakage rate of the downstream valve (phase 83). Both of these times should be set to the same value. These times can be calculated using the following equation:

$$t_{test} = \frac{(P_i - P_{set}) \times V \times 3600}{P_{atm} \times Q_{leak}}$$

   $t_{test}$ = Time for setting parameters "VP_TmeAtmPress" and "VP_Tme_GasPress" in seconds
   $P_i$ = Inlet gas pressure (pressure upstream of both valves) in PSIG
   $P_{set}$ = Gas pressure setting on pressure switch in PSIG (should be set for half of $P_i$)
   $P_{atm}$ = Atmospheric pressure downstream of both valves in PSIA (typically 14.7 PSI)
   $V$ = Volume between the gas valves to be tested in $ft^3$
   $Q_{leak}$ = Allowable leakage rate in $ft^3/hr$

   For Option 3, these times should be calculated independently for the pilot and main valves, and the larger of the calculated times should be used as the parameter setting.

4. Parameter "PreIgnitionTGas" should be set for its default of 2 seconds. This parameter can be found at the following menu path in the LMV5:

   Params & Display > BurnerControl > Times > TimesStartup1 > PreIgnitionTGas

# Pilot Valve Proving (continued)

### Option 1: On Startup with SKP25's on both the Pilot and Main Gas Trains

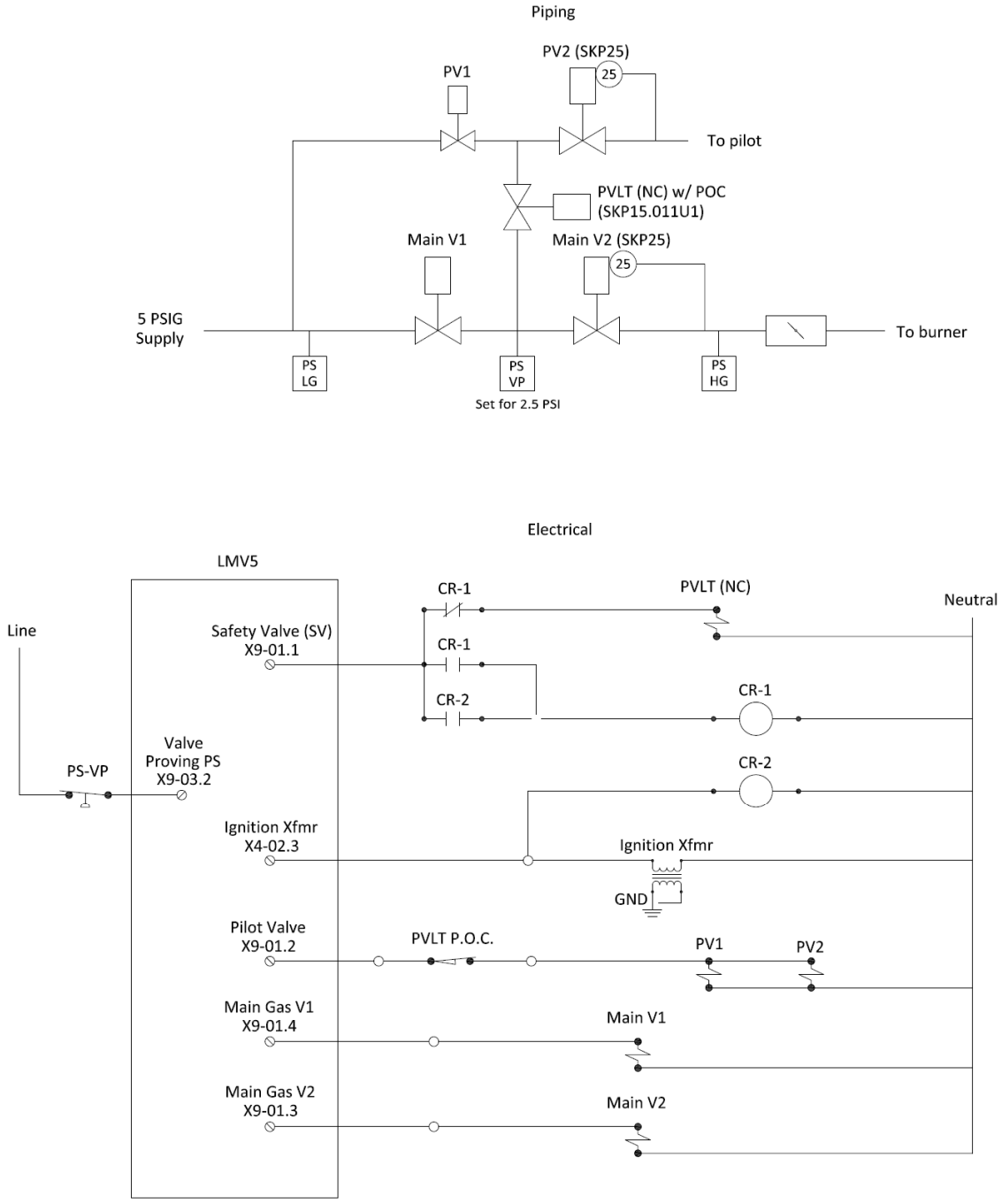


**Figure 9: Option 1 Piping and Electrical Schematics**

# Pilot Valve Proving (continued)

### Option 1 Sequence of Operation

1. The LMV5 is in standby. All valves are closed and all relay contacts are as shown in the electrical schematic.

2. The LMV5 receives a call for heat. The SV terminal (X9-01.1) energizes before the blower, energizing the PVLT (Pilot Valve Leak Test). The PVLT opens, and connects the volumes between the pilot valves and main valves. The PVLT POC switch also opens, preventing the operation of the pilot valves.

3. During prepurge, the main valve proving sequence takes place as normal. The PS-VP (Pressure Switch - Valve Proving) is wired to terminal X9-03.2 as normal. The setpoint of the PS-VP should be set for half of the inlet pressure.

4. The LMV5 drives to ignition position. The ignition transformer output (X4-02.3) energizes, thereby energizing the CR-2 coil, and latching the CR-1 coil from the power supplied from X9-01.1. At the same time, one of the CR-1 contacts opens, thereby closing the PVLT valve and closing the PVLT POC switch. Note that the PVLT POC switch must be closed before the pilot valves open.

5. The LMV5 continues light off and runs as normal, with the CR-1 coil latched in and the PVLT valve closed.

6. Upon shutdown, the SV terminal (X9-01.1) de-energizes, which un-latches the circuit. The PVLT valve remains closed until the next start up.

### Option 1 Important Notes

1. The proof of closure switch on the PVLT ensures that gas is unable to flow between the pilot and main valves before the pilot attempts to light.

2. All four valves are tested at the inlet pressure, which is the pressure that they normally operate at. The PS-VP should be set for half of the inlet pressure which provides a valid test for all four valves.

3. Valve proving must be done on startup only.

# Pilot Valve Proving (continued)

### Option 2: On Startup, SKP25 on the Main Gas Train, Solenoid Valves on the Pilot Train

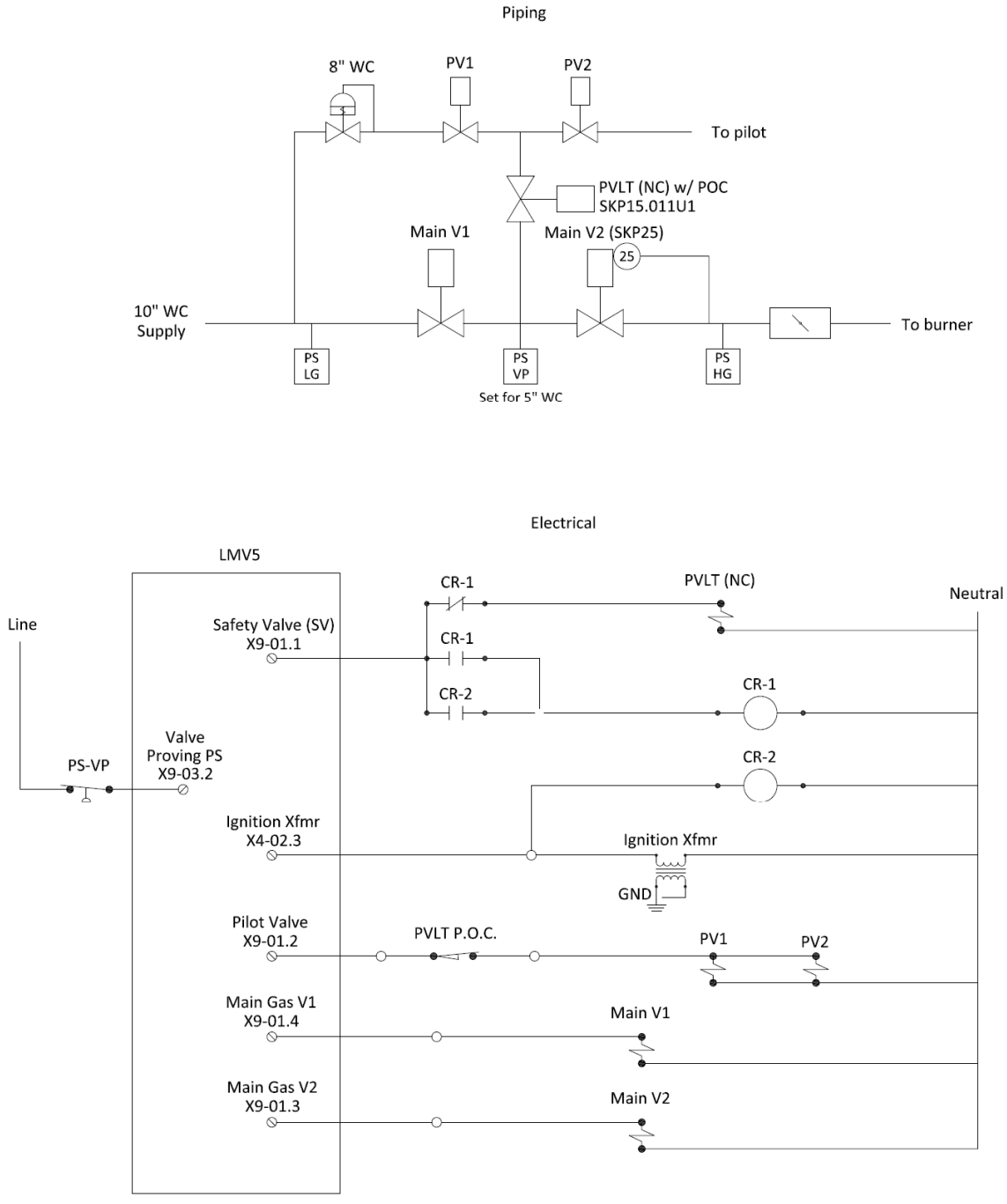


**Figure 10: Option 2 Piping and Electrical Schematics**

# Pilot Valve Proving (continued)

### Option 2 Sequence of Operation

1. The LMV5 is in standby. All valves are closed and all relay contacts are as shown in the electrical schematic.

2. The LMV5 receives a call for heat. The SV terminal (X9-01.1) energizes before the blower, energizing the PVLT (Pilot Valve Leak Test). The PVLT opens, and connects the volumes between the pilot valves and main valves. The PVLT POC switch also opens, preventing the operation of the pilot valves.

3. During prepurge, the main valve proving sequence takes place as normal. The PS-VP (Pressure Switch - Valve Proving) is wired to terminal X9-03.2 as normal. The setpoint of the PS-VP should be set for half of the inlet pressure.

4. The LMV5 drives to ignition position. The ignition transformer output (X4-02.3) energizes, thereby energizing the CR-2 coil, and latching the CR-1 coil from the power supplied from X9-01.1. At the same time, one of the CR-1 contacts opens, thereby closing the PVLT valve and closing the PVLT POC switch. Note that the PVLT POC switch must be closed before the pilot valves open.

5. The LMV5 continues light off and runs as normal, with the CR-1 coil latched in and the PVLT valve closed.

6. Upon shutdown, the SV terminal (X9-01.1) de-energizes, which un-latches the circuit. The PVLT valve remains closed until the next start up.

### Option 2 Important Notes

1. The proof of closure switch on the PVLT ensures that gas is unable to flow between the pilot and main valves before the pilot attempts to light.

2. Inlet pressure and pilot pressure must be similar (within ~30%) to have a valid test for all four valves.

3. Valve proving must be done on startup only.

# Pilot Valve Proving (continued)

### Option 3: Pilot Valve Proving on Startup and Main Valve Proving on Shutdown

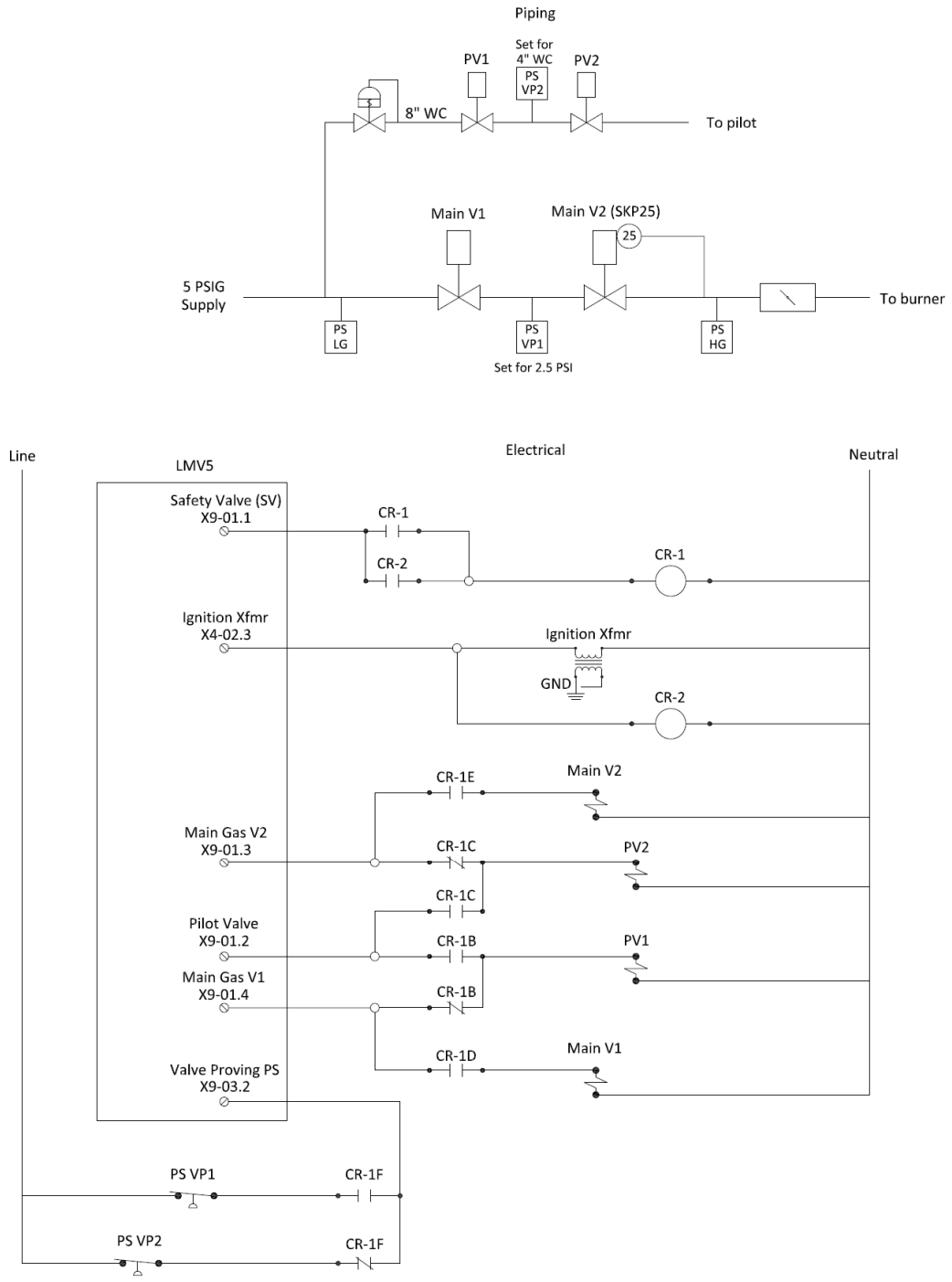


**Figure 11: Option 3 Piping and Electrical Schematics**

# Pilot Valve Proving (continued)

### Option 3 Sequence of Operation

1. The LMV5 is in standby. All valves are closed and all relay contacts are as shown in the electrical schematic. Main gas valve V1 terminal X9-01.4 is effectively connected to PV1, and main gas valve V2 terminal X9-01.3 is effectively connected to PV2.

2. The LMV5 receives a call for heat. The SV terminal (X9-01.1) energizes before the blower, which has no effect. The LMV5 drives to prepurge position.

3. During prepurge, the valve proving sequence takes place on the pilot valves only. PS-VP2 (the Pressure Switch Valve Proving between the pilots) is effectively connected to the valve proving terminal (X9-03.2). The setpoint of PS-VP2 should be set for half of the inlet pressure to the pilot valves.

4. The LMV5 drives to ignition position. The ignition transformer output (X4-02.3) energizes, thereby energizing the CR-2 coil, and latching the CR-1 coil from the power supplied from X9-01.1. The main gas valve V1 terminal (X9-01.4) is connected to main gas valve V1, and the main gas valve V2 terminal (X9-01.3) is connected to main gas valve V2. The pilot valve terminal (X9-01.2) is connected to both PV1 and PV2. Also, PS-VP1 is now connected to the valve proving terminal (X9-03.2).

5. The LMV5 continues to light off and runs as normal, with the CR-1 coil latched in.

6. Upon shutdown, the LMV5 proceeds directly into valve proving on shutdown. The SV terminal (X9-01.1) is still energized, so the main valves will go through valve proving using PS-VP1. The setpoint of PS-VP1 should be set for half of the main inlet pressure.

7. After valve proving on shutdown is complete, the SV terminal (X9-01.1) de-energizes and the CR-1 circuit unlatches.

### Option 3 Important Notes

1. Separate pressure switches for the pilot valves and main valves are required.

2. All four valves are tested independently.

3. Valve proving must be done on both startup and shutdown of the boiler.

# Purge Proving

### Introduction

Purge proving verifies either a differential air pressure switch or an air damper end switch is in the correct position before purge begins. This can be accomplished in two different ways:

- A differential pressure switch to verify proper air flow through the boiler. Once the proper differential pressure is achieved, the prepurge position has been verified and the purge begins.
- An end switch on the air damper. Once the air damper has moved to its fully open position, the end switch closes and the purge begins.

The following procedure for purge proving on the LMV5 uses an additional two-pole relay with either a differential pressure switch or an air damper end switch.

**NOTE: Do not perform purge proving if using direct start on the LMV5!**

### Procedure

The following procedure uses either a differential pressure switch or an air damper end switch for purge proving on the LMV5. For the rest of this procedure, either switch will be referred to as a "proving switch".

1. Wire the LMV5, proving switch, and two-pole relay as shown below in Figure 12.

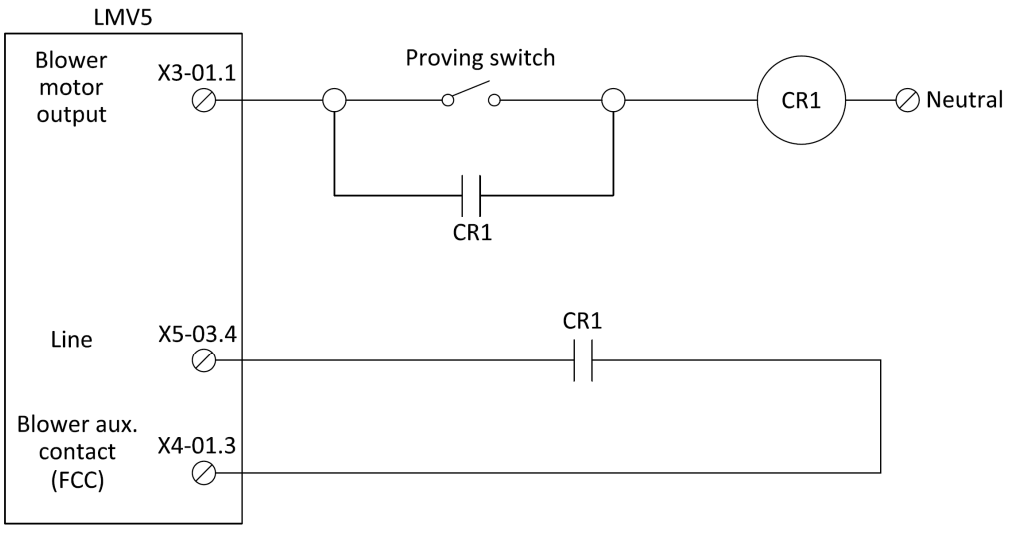


**Figure 12: LMV5 Purge Proving Wiring Diagram**

# Purge Proving

2. Input X4-01.3 on the LMV5 must be configured for a blower auxiliary contact. This can be set through the following menu path in the LMV5:

   Params & Display > BurnerControl > Configuration > ConfigIn/Output > FGR-PS/FCC = **FCC**

**Operation**

1. In phase 22, the blower motor output (X3-01.1) energizes, powering the common side of the proving switch. **Note: Since the blower motor may never turn off when using direct start, purge proving cannot be used in conjunction with direct start on the LMV5.**

2. By the end of phase 24, the blower auxiliary contact input (X4-01.3) must be energized or the LMV5 will lockout on a “fan contactor contact” (FCC) fault.

3. Once the proving switch makes, relay CR1 energizes and the two normally-open contacts close.

4. The contact wired in parallel with the proving switch latches power to relay CR1 as long as the blower is on.

5. The other contact wired off of line terminal X5-03.4 completes the circuit to the blower auxiliary contact input (X4-01.3). At this point, the purge proving is complete and the LMV5 will progress to phase 30 (prepurge).

# Remote Setpoint

### Introduction

The LMV5 can be configured to accept either a local setpoint or a remote setpoint. A remote setpoint takes an analog input and converts it into a setpoint. On the LMV5, terminal X62 can be wired and configured to accept a variety of signals for a remote setpoint. The following steps describe the procedure for setting up a remote setpoint on the LMV5.

### Procedure

1. Log in to the LMV5 with either the service or OEM level password.

2. The LMV5 must be set for a load controller operating mode of "IntLC X62". The LMV5 will utilize the internal PID loop, but will also respond to a remote setpoint from an analog signal on terminal X62. To set the load controller operating mode to "IntLC X62", use the following menu path:

   Params & Display > LoadController > Configuration > LC_OptgMode = **IntLC X62**

3. Configure the type of analog signal which will be input to terminal X62. Four options are available: 0-10 Vdc, 2-10 Vdc, 0-20 mA, or 4-20 mA. Use the following menu path to set the input type for terminal X62:

   Params & Display > LoadController > Configuration > Ext Inp X62 U/I

   **NOTE: For the remainder of this section, all examples will use a 4-20 mA signal.**

4. The analog input must be scaled appropriately depending on the desired setpoint limits for the remote setpoint. The LMV5 predefines what setpoint a 4 mA signal indicates. Conversely, the LMV5 must be programmed with the desired setpoint for a 20 mA signal. Then, the setpoint will be scaled linearly for any signal between 4 and 20 mA.

   Low Setpoint Scaling
   When operating on pressure, a 4 mA signal **always** translates to a 0 psi setpoint.
   When operating on temperature, a 4 mA signal **always** translates to a 32°F setpoint.

   High Setpoint Scaling
   The high end of the setpoint scaling depends on the sensor type wired to terminals X60 or X61. There are three possibilities for sensor type: a pressure sensor wired to terminal X61, a temperature sensor wired to terminal X60, or a temperature transmitter wired to terminal X61.

## Remote Setpoint (continued)

*Pressure Sensor Wired to Terminal X61*
When operating on pressure, a 20 mA signal translates to the value programmed into parameter "MRange PressSens". Parameter "MRange PressSens" can be accessed through the following menu path:

Params & Display > LoadController > Configuration > MRange PressSens

This value should not be changed as it is used to scale the high end of the pressure sensor connected to terminal X61. This should simply be noted for later calculations.

*Temperature Sensor Wired to Terminal X60*
When operating on temperature via an RTD wired on terminal X60, a 20 mA signal translates to the value programmed into parameter "MeasureRangePtNi". This parameter can be set for 302°F, 752°F, or 1562°F. It is recommended for best resolution that this is set to 302°F unless a setpoint over 302°F is desired. Note that if "MeasureRangePtNi" is exceeded, a temperature sensor fault will occur. Parameter "MesaureRangePtNi" can be accessed through the following menu path:

Params & Display > LoadController > Configuration > MeasureRangePtNi

*Temperature Transmitter Wired to Terminal X61*
When operating on temperature via an analog input on terminal X61, a 20 mA signal translates to the value programmed into parameter "MRange TempSens". Parameter "MRange TempSens" can be accessed through the following menu path:

Params & Display > LoadController > Configuration > MRange TempSens

This value should not be changed as it is used to scale the high end of the temperature sensor connected to terminal X61. This should simply be noted for later calculations.

5. Finally, upper and lower setpoint limits can be programmed using parameters "Ext MinSetpoint" and "Ext MaxSetpoint". These parameters are percentages of the range from the low setpoint limit to the high setpoint limit. As a formula, these parameters should be set using the following method:

$$Ext\ MinSetpoint = \frac{Desired\ Low\ Setpoint - Low\ Setpoint\ Scale}{High\ Setpoint\ Scale - Low\ Setpoint\ Scale}$$

$$Ext\ MaxSetpoint = \frac{Desired\ High\ Setpoint - Low\ Setpoint\ Scale}{High\ Setpoint\ Scale - Low\ Setpoint\ Scale}$$

## Remote Setpoint (continued)

"Ext MinSetpoint" and "Ext MaxSetpoint" are found through the following menu path:

Params & Display > LoadController > Configuration

These parameters do not re-scale the input, but provide hard upper and lower limits on the setpoint. The following is an example on how these parameters may be utilized.

**Example: Pressure Sensor Wired to Terminal X61**

LC_OptgMode = IntLC X62
Ext Inp X62 U/I = 4..20 mA
MRange PressSens = 200 psi
Desired remote setpoint range = 100-150 psi

A 4-20 mA signal on terminal X62 scales the setpoint from 0-200 psi. Parameters "Ext MinSetpoint" and "Ext MaxSetpoint" need to be utilized to get the appropriate setpoint range.

$$Ext\ MinSetpoint = \frac{100\ psi - 0\ psi}{200\ psi - 0\ psi} = \frac{100}{200} = 50\%$$

$$Ext\ MaxSetpoint = \frac{150\ psi - 0\ psi}{200\ psi - 0\ psi} = \frac{150}{200} = 75\%$$

With these parameters set, the following input signals will scale the setpoint accordingly:

4 - 12 mA = 100 psi (limited by "Ext MinSetpoint")
12 - 16 mA = 100 - 150 psi
16 - 20 mA = 150 psi (limited by "Ext MaxSetpoint")

# Remote Setpoint (continued)

**Example: Temperature Sensor Wired to Terminal X60**

LC_OptgMode = IntLC X62
Ext Inp X62 U/I = 4..20 mA
MeasureRangePtNi = 302 °F
Desired remote setpoint range = 180-270 °F

A 4-20 mA signal on terminal X62 scales the setpoint from 32-302 °F. Parameters “Ext MinSetpoint” and “Ext MaxSetpoint” need to be utilized to get the appropriate setpoint range.

$$Ext\ MinSetpoint = \frac{180°\text{F} - 32°\text{F}}{302°\text{F} - 32°\text{F}} = \frac{148}{270} = 55\%$$

$$Ext\ MaxSetpoint = \frac{270°\text{F} - 32°\text{F}}{302°\text{F} - 32°\text{F}} = \frac{238}{270} = 88\%$$

With these parameters set, the following input signals will scale the setpoint accordingly:

4 – 12.8 mA = 180 °F (limited by “Ext MinSetpoint”)
12.8 – 18.1 mA = 180 - 270 °F
18.1 - 20 mA = 270 °F (limited by “Ext MaxSetpoint”)

# Remote Setpoint (continued)

**Example: Temperature Transmitter Wired to Terminal X61**

LC_OptgMode = IntLC X62
Ext Inp X62 U/I = 4..20 mA
MRange TempSens = 300 °F
Desired remote setpoint range = 200-240 °F

A 4-20 mA signal on terminal X62 scales the setpoint from 32-300 °F. Parameters “Ext MinSetpoint” and “Ext MaxSetpoint” need to be utilized to get the appropriate setpoint range.

$$Ext\ MinSetpoint = \frac{200°\mathrm{F} - 32°\mathrm{F}}{302°\mathrm{F} - 32°\mathrm{F}} = \frac{168}{270} = 62\%$$

$$Ext\ MaxSetpoint = \frac{240°\mathrm{F} - 32°\mathrm{F}}{302°\mathrm{F} - 32°\mathrm{F}} = \frac{208}{270} = 77\%$$

With these parameters set, the following input signals will scale the setpoint accordingly:

4 – 13.9 mA = 200 °F (limited by “Ext MinSetpoint”)
13.9 – 16.3 mA = 200 - 240 °F
16.3 - 20 mA = 240 °F (limited by “Ext MaxSetpoint”)

# Valve Proving with Two Pressure Switches

### Introduction

Valve proving detects if the main gas valves in a gas train are leaking. Typically, one pressure switch, mounted between the main gas valves, is used to test for valve leaks. However, a more sensitive test can be performed using two pressure switches, one switch to test the upstream valve, and one switch to test the downstream valve. To perform valve proving with two pressure switches, both switches must be mounted between the main gas valves as shown below.

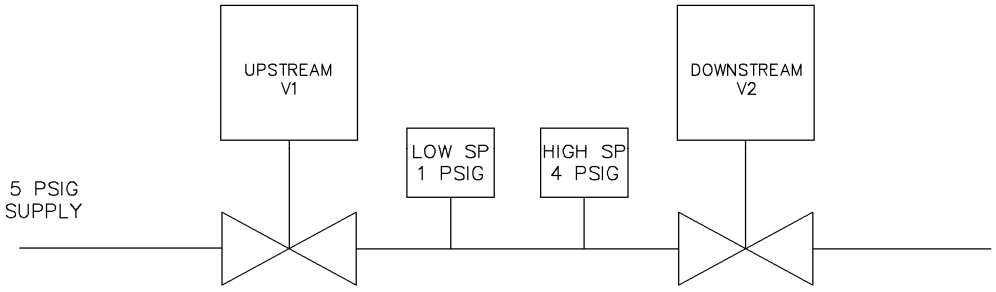


Wire the LMV5, pressure switches, main valve POC switches, and a relay as shown below.

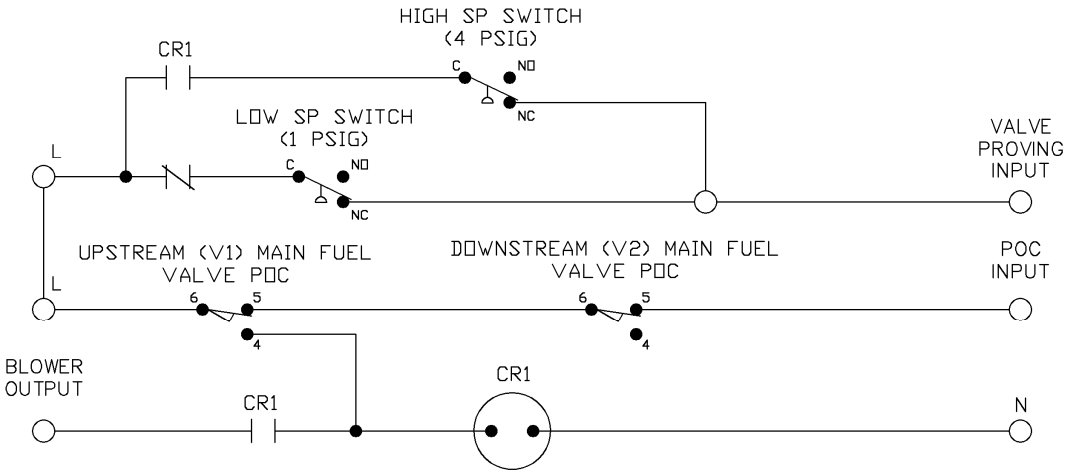

# Valve Proving with Two Pressure Switches (continued)

### Sequence of Operation

1. The blower energizes, but nothing happens as CR1 remains open.

2. V2 opens, evacuating the space between the main valves.
    a. The V2 POC switch changes state, but this has no effect on CR1.

3. V2 closes, and the waiting time begins.
    a. If V1 leaks by, the low SP switch will open (NO), and the valve proving input will de-energize (test fail).
    b. The high SP switch is essentially not in the circuit at this point (CR1 open)

4. If V1 passes the test, V1 is opened, pressurizing the space between the main valves.
    a. Normally open contact (4) on the V1 POC switch latches CR1 coil, all CR1 contacts change state.
    b. The high SP switch will be open (NO). The low SP switch is essentially removed from the circuit.

5. V1 closes, and the waiting time begins.
    a. If V2 leaks by, the high SP switch will close and the valve proving input will energize (test fail).
    b. CR1 coil is still latched at this point.

6. The burner lights off, V1 and V2 are energized, both POC switches open.
    a. This has no effect on the CR1 coil, which remains latched.

7. After post purge, the blower output de-energizes and un-latches the circuit.

### Important Notes

1. The valve proving input X9-03.2 must be energized for the V1 leak test, and de-energized for the V2 leak test.

2. Valve proving must be done on startup only.

3. If the relay were to fail (stick one way or the other), a less-sensitive valve proving test would result. A POC switch could never be jumpered by a failed relay.

# VFD Bypass

**Introduction**

When using an LMV52 with a variable frequency drive (VFD), it may be beneficial to bypass the VFD and run the motor at full speed. There are typically two reasons for doing this:

- On a single fuel system, it is desired to have the ability to run without the VFD, typically in the event of a VFD malfunction.
- On a dual fuel system, it is desired to use the VFD with one fuel (typically gas) but not the other fuel (typically oil).

The following pages provide the information to apply a VFD bypass on either a single or dual fuel system. For the single fuel system, the fuel is assumed to be gas. For the dual fuel system, it will be assumed that the main fuel is gas and the secondary fuel is oil.

# VFD Bypass (continued)

To bypass the VFD on a single fuel system, both gas and oil settings in the LMV52 need to be utilized. One fuel will be set up to run with the VFD, while the other fuel is set up to run without the VFD. For the rest of this procedure, it will be assumed that a VFD is being used when running gas and not being used when running oil. Since only one fuel (gas) is being operated on both gas and oil settings, the AGM60 switching module will be used to change over all necessary inputs and outputs when the LMV52 switches between fuels.

**Single Fuel Procedure**

1. Wire the VFD and motor contactor contacts as shown in Figure 13.

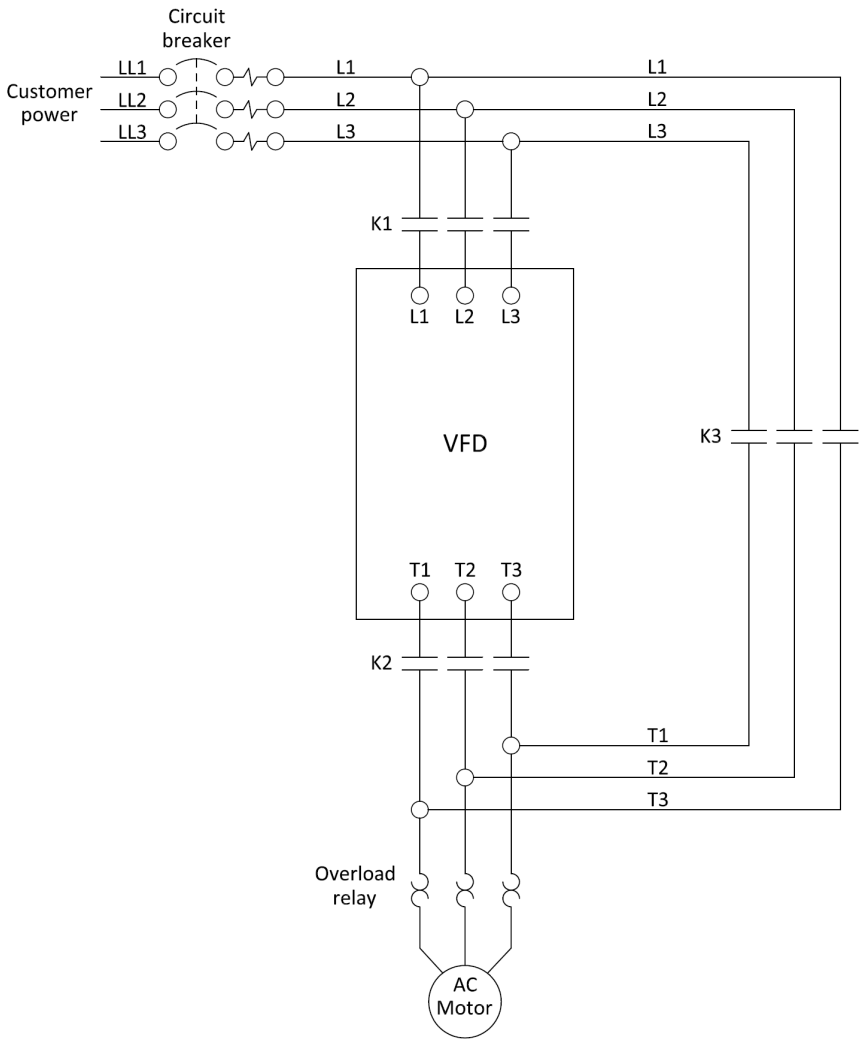


**Figure 13: VFD Wiring for Single Fuel VFD Bypass**

# VFD Bypass (continued)

2. Wire the LMV52, AGM60, and motor contactor coils as shown in Figure 14.

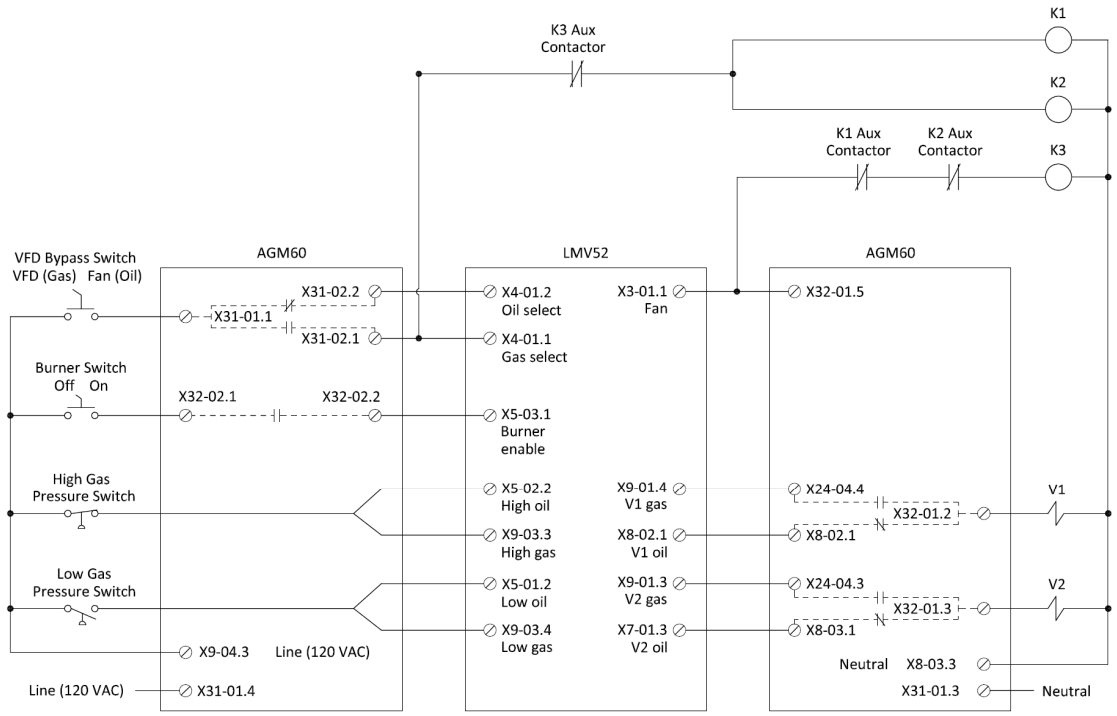


**Figure 14: LMV52 and AGM60 Wiring for Single Fuel VFD Bypass**

3. Set parameter "NumFuelActuators" to 1 since only one actuator will be used to operate both fuels. This parameter can be set using the following menu path:

   Params & Display > RatioControl > NumFuelActuators = **1**

4. Ensure the VFD is activated on gas, and deactivated on oil. This can be done through the following menu paths:

   Params & Display > RatioControl > Gas Settings > VSD = **activated**
   Params & Display > RatioControl > Oil Settings > VSD = **deactivated**

5. Ensure the LMV52 is not set up for continuous purge. This can be done through the following menu path:

   Params & Display > BurnerControl > Configuration > ConfigGeneral > ContinuousPurge = **deactivated**

# VFD Bypass (continued)

6. Activate the high and low pressure switch inputs for gas and oil. This can be done by setting the following four parameters to "activated":

   Params & Display > BurnerControl > Configuration > ConfigIn/Output > GasPressureMin
   Params & Display > BurnerControl > Configuration > ConfigIn/Output > GasPressureMax
   Params & Display > BurnerControl > Configuration > ConfigIn/Output > OilPressureMin
   Params & Display > BurnerControl > Configuration > ConfigIn/Output > OilPressureMax

7. Ensure the proper fuel train is selected when VFD bypass is utilized on the oil settings. The following parameter should be set to "Lo w Gasp" if a piloted gas train is being used, or "LightOilLO" if direct spark ignition is being used on the gas train:

   Params & Display > BurnerControl > Configuration > ConfigGeneral > FuelTrainOil

**Single Fuel Operation**

1. When the "VFD Bypass Switch" is in VFD mode, motor contactors K1 and K2 are energized. Power flows through the VFD to the motor. Bypass contactor K3 remains de-energized. The fuel select terminal (X31-01.1) on the AGM60 is de-energized, so the LMV52 runs gas. All inputs and outputs are connected through the AGM60 to the LMV52 gas terminals.

2. When the "VFD Bypass Switch" is in Fan mode, motor contactors K1 and K2 are de-energized and no power flows to the VFD. Power runs directly to the motor through bypass contactor K3 once the fan output (X3-01.1) is energized in phase 22. The fuel select terminal (X31-01.1) on the AGM60 is energized, so the LMV52 runs oil. All inputs and outputs are connected through the AGM60 to the LMV52 oil terminals.

3. If the "VFD Bypass Switch" is switched during operation, the LMV52 immediately loses its call for heat and goes through its shutdown sequence. When the fan output (X3-01.1) de-energizes after phase 78, terminal X32-01.5 on the AGM60 becomes de-energized, causing the switchover of all inputs and outputs connected through the AGM60 and the motor contactors.

   **Note:** Even though this is a single fuel system running gas, the LMV52 display will state it is running oil when the "VFD Bypass Switch" is in Fan mode.

# VFD Bypass (continued)

### Dual Fuel Procedure

1. Wire the LMV52, VFD, and motor contactors as shown in Figure 15.

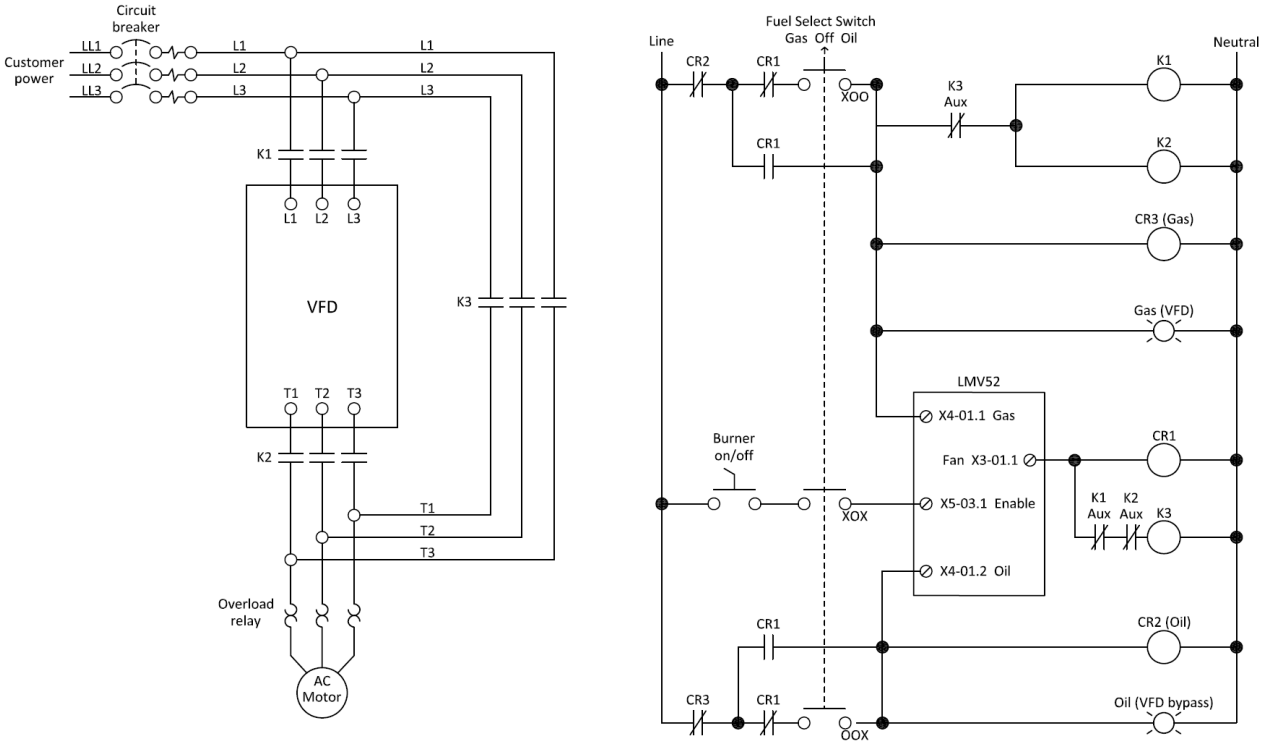


**Figure 15: Wiring for a Dual Fuel VFD Bypass**

2. Ensure the VFD is activated on gas, and deactivated on oil. This can be done through the following menu paths:

   Params & Display > RatioControl > Gas Settings > VSD = **activated**
   Params & Display > RatioControl > Oil Settings > VSD = **deactivated**

3. Ensure the LMV52 is not set up for continuous purge. This can be done through the following menu path:

   Params & Display > BurnerControl > Configuration > ConfigGeneral > ContinuousPurge = **deactivated**

# VFD Bypass (continued)

**Dual Fuel Operation**

1. When the “Fuel Select Switch” is in gas mode, the coil for CR3 is energized, preventing the LMV52 from running oil. Motor contactors K1 and K2 are energized and power flows through the VFD to the motor. Auxiliary contactors on K1 and K2 prevent motor contactor K3 from energizing. The gas select terminal (X4-01.1) on the LMV52 is energized, and the LMV52 operates on gas.

2. When the “Fuel Select Switch” is in oil mode, the coil for CR2 is energized which prevents the LMV52 from running gas. Motor contactors K1 and K2 are de-energized and no power flows to the VFD. Power runs directly to the motor through bypass contactor K3 once the fan output (X3-01.1) is energized in phase 22. An auxiliary contactor on K3 prevents motor contactors K1 and K2 from energizing. The oil select terminal (X4-01.2) on the LMV52 is energized, and the LMV52 operates on oil.

3. When the “Fuel Select Switch” is in off mode, terminal X5-03.1 is de-energized, preventing the LMV52 from running.

4. Once the fan turns on in phase 22 while running either fuel, the coil for CR1 is energized. The normally open contacts for CR1 close, latching the current fuel in place until the fan turns off after phase 78.

5. If direct start is activated and a fuel changeover is required, turn the “Fuel Select Switch” to off. Wait for the LMV52 to get back to standby (phase 12). Switch the “Fuel Select Switch” to the desired fuel.

Intentionally Left Blank

Intentionally Left Blank

# Technical Instructions
# Document No. LV5-1000
# June 27, 2018

SCC, Inc.
1250 Lunt Avenue
Elk Grove Village, IL  60007
USA
Telephone: (224) 366-8445
**www.scccombustion.com**

Solution Partner

Combustion Controls

SIEMENS

HOME